INSTALLER'S GUIDE 2015

ecler
Sound experience
Barcelona 1965

INSTALLER'S GUIDE 2015

Throughout these 50 years, since Ecler's birth back in 1965, we have always developed our catalogue trying to listen to you.

Today we still keep this aim untouched. We understand that these days technology, quickly changing, must be a flexible tool to provide global and integrable solutions, more than just individual products.

We keep focussing on innovation and design, both essential. And we spot how they really add value: amazing features combined with a user-friendly and ergonomic approach for the end-user, the non-technical character of the story, but indeed the main one.

We realise that today AV integration has become a growing and solid market, frequently encouraging companies towards a global scope, which requests for global partners, as we are.

A global green awareness is, happily, growing as well. We are proud of being part of this vital commitment, taking care of the planet with products designed for energy-saving and manufactured with sustainable policies.

With the present catalogue we are ready to offer you a quality sound solution for every installation and integration challenge you may face up. This was the goal, and we honestly think it's been achieved.

Ecler. Innovating with you.

VALUES

EXPERIENCE

We're proud to approach our 50 years of know-how designing and manufacturing professional audio solutions.
Reliability is a must. All ECLER products are designed to deliver a long, solid and failure-free working life, even in extreme use conditions, thereby guaranteeing low MTBF (Mean Time Between Failures) ratios.
We individually test 100% of our products, avoiding the typical random samples testing procedures in the industry.
This leads us to a entirely TRUSTWORTHY manufacturing. Quality. ECLER is an ISO 9001 certified company.

INNOVATION

ECLER firmly believes that INNOVATION is essential in providing the market with audio solutions that require a pioneer approach.
SPM amplification patented technology and EclerNet proprietary hardware&software platform, including Ethernet remote control of the MIMO 88 digital matrix and NXA/NPA digital devices, are clear examples of our achievements.

ERGONOMICS

Versatility. Our products have been designed to meet the technical and user requirements of a wide range of applications and environments.
A good example is our WPmSCREEN digital remote controller for the EclerNet range of products: a touch-screen based device that can be tailored to graphically control and manage a whole installation, exactly meeting each end user profile and needs.
ECLER cares about control interfaces being as much user-friendly as possible.

ELECTRONICS WARRANTY 3 YEARS

DESIGN

ECLER has been the first pro audio company to partner with the famous Italian industrial designer Giugiaro (www.italdesign.it).
The results of our collaboration are the loudspeaker cabinet series AUDEO and VERSO.

GREEN

We're really committed with the planet's health, energy saving and CO2 emission reduction.
SPM Technology, classs D amplifiers, switching power supplies and auto-standby function provide our electronics with higher efficiency and lower energy wasting.
Recycling materials and using non-contaminant components are also top priorities in our green crusade.

GLOBAL

Our philosophy is to provide our customers with a global solution.
Firstly, this involves offering an extensive range of products under one single and solid roof.
Secondly, to operate in more than 50 countries. People are one of our chief assets: a wide distribution network, relational marketing, product specialists, our own projects department, technical assistance service, training and cooperation... all with a view to better understanding what is required from our company and our SERVICE.
Because global customers deserve a global solution.
One supplier, a global partnership.

INDEX

	PAGE
Audio Sound Sources	4
Installation Analogue Mixers / Preamplifiers	5
5x4 Audio Analogue Matrix	8
Installation Audio Digital Mixer	9
8x8 Audio Digital Matrix	10
EclerNet Touch-Screen Wall Panel	14
Digital Processors	15
AV Integration Micro-Amplifiers	17
AV Integration Digital Mixing Amplifier	19
Powered Media Mixer	20
Self-Powered Mixers	21
Amplifiers	22
Powered Digital Audio Managers	26
Amplifiers	29
In Ceiling / In Wall Speakers	32
Loudspeaker Cabinets	36
Amplifier Accessories	56
Audio Accessories	57
Desktop Paging Stations	60
Accessories Compatibility Chart	61
Plug & Play Audio Sets	62
Installation References	64
Advertisements	72

DUO-NET PLAYER

DUAL STREAMING & MEDIA PLAYER

DUO-NET PLAYER is a double audio sound source that features full EclerNet compatibility (EclerNet Manager software, UCP control system, WPmSCREEN remote management, TP-NET third party integration protocol, etc.). It includes 2 independent stereo media players, each one being able to play Internet audio streams and local or networked audio media.
DUO-NET PLAYER can be used as a stand-alone media player or integrated as a piece of a full EclerNet system, as well as coexisting with third-party devices.

Key features

- 2 independent media players, each one linked to a dedicated stereo output
- Compatible with mp3, ogg, AAC, WAV and PLAC audio formats
- 2 stereo balanced outputs, Euroblock connector
- SD and USB slots for local storage media contents
- Ethernet interface (RJ45 connector) for EclerNet and TP-NET control, Internet streaming reception and networked media playback
- Fully programmable and controllable via EclerNet software (directly wired to a PC or by means of an Ethernet network)
- UCP (User Control Panels) remote control system, compatible with WPmSCREEN and third-party client devices, such as computers, tablets, smartphones, etc. (iOS©, Windows© and Android© compatible)
- TP-NET compatible via RS-232 and Ethernet interfaces
- 4 GPI ports (General Purpose Inputs), ready to trigger events by means of external contacts' closure, using direct or binary coding
- Integrated RTC (Real-Time Clock) and NTP (Network Time Protocol) synchronization, for scheduled events triggering
- Front panel controls and display:
  - Matrix LCD with single and dual player views
  - Direct A and B players' access keys
  - 4 playback control keys
  - 5 programmable keys (presets recovery, playlists direct access, etc.)
  - Menu key and digital encoder (setup and menus browsing)
- IR remote control for basic end-user control
- Priority management: priority media (emergency, advertising, etc.) can be triggered (by GPIs, scheduled, UCP panels, front panel keys, etc.) and played on one or both players, over-riding the existing program audio

Applications

- Audio sound source in A/V corporate, retail and education applications
- BGM & Paging solutions, with message priorities and independent audio source independent selection
- Integration in installation global control

Accessories

- **WPmSCREEN** touch-screen wall panel

SAM312 Key features

- 3 input channels, 2 main outputs 19" installation mixer
- 3 MIC/stereo LINE input channel mixer
- Input signal pushbutton selector (MIC/LINE) on back panel
- Dedicated "Low Line" input with adapated sensibility for low level line signal sources, like mp3 players (iPod®, etc.) and laptop computers
- Independent internal assignable phantom power for all MIC inputs
- Direct MIX input allows straight forward connection of further mixers
- Triple tone control (accessible only with screwdriver)
- 2 stereo outputs
- 3 led output level metre
- 2 additional stereo REC outputs (REC1, REC2)
- Mono mode pushbutton
- Headphones general MIX monitoring
- Full remote MUTE control
- Side rack mount ears with 2 possible positions, for front panel alignment with devices in the same rack

SAM412T Key features

- 4 MICRO/LINE input channels with independent 3 band tone control 19" installation mixer
- 4 channels with 2 selectable inputs per channel (balanced micro, line)
- Dedicated "Low Line" input with adapted sensibility for low level line signal sources, like mp3 players (iPod®, etc.) and laptop computers
- Micro sensitivity level can be adjusted on the back panel
- +18V Phantom Power available in all "MIC" inputs
- Direct micro input on front panel, channel 1
- Includes a talkover assigned to "INPUT 1" with internal release time adjustment
- Three-band tone controls for each channel, accessible with a screwdriver
- Vu-meter for the mix signal
- Output level control
- Two internally adjustable output levels
- Recording output
- Direct access to the mixing bus allowing you to connect another mixer and increase the number of inputs
- Remote MUTE control affecting all inputs for connecting fire detection systems and/or other safety devices. Internally programmable "NO / NC" (normally open, normally closed)
- Mono/stereo switch
- Side rack mount ears with 2 possible positions, for front panel alignment with devices in the same rack

WPmMIX-T

MPAGE1

Applications

- Gyms
- Licensed venues
- Restaurants
- Leisure venues
- Retail outlets
- Boardrooms and conference centres
- Entertainment music playback
- Education centres
- A/V presentations

Accessories

- **MPAGE1** , desktop paging station (for more information visit the MPAGE series product page)
- **WPmMIX-T, MICRO+LINE** wall panel mixer with talkover function

INSTALLATION ANALOGUE MIXERS / PREAMPLIFIERS

SAM312, SAM412T, SAM512T, SAM614T

SAM512T Key features

- 5 input channels, 2 main outputs 19" installation mixer
- 5 MIC/stereo LINE input channel mixer
- Input signal pushbutton selector (MIC/LINE) on back panel
- Dedicated "Low Line" input with adapated sensibility for low level line signal sources, like mp3 players (iPod®, etc.) and laptop computers
- PFL on all inputs for headphone monitoring
- Independent internal assignable phantom power for all MIC inputs
- Channel 1 features integrated TALKOVER on MIC input. Additional front panel MIC connector
- Direct MIX input allows straight forward connection of further mixers
- Triple tone control (accessible only with screwdriver)
- 2 stereo outputs with independent volume control
- 3 LED output level metre
- 2 additional stereo REC outputs (REC1, REC2)
- Mono mode pushbutton
- Full remote MUTE control
- Side rack mount ears with 2 possible positions, for front panel alignment with devices in the same rack

SAM614T Key features

- 6 input channels routable to 2 main outputs. 19" installation mixer
- 6 input channels
- MIC inputs on channels 1 and 2
- Dedicated "Low Line" input with adapted sensibility for low level line signal sources, like mp3 players (iPod®, etc.) and laptop computers
- MIC/stereo LINE in channels 3 and 4. Input signal selector (MIC/LINE) on back panel
- Stereo LINE on channels 5 and 6
- Input signal gain level control (accessible only with a screwdriver)
- Each channel features signal present (SP) and CLIP indicators
- General phantom power switch located on back panel. Independent internal phantom power assignment to any MIC input
- Triple tone control (accessible only with a screwdriver)
- 2 main stereo outputs with independent volume control
- 3 LED output level metre
- Input channels can be routed to any main output (A,B) or both
- 2 additional stereo REC outputs (REC1, REC2)
- Mono mode selector
- Headphones monitoring of selected output (A or B)
- Integrated, internally configurable TALKOVER. Affects OUT A and REC A
- Built-in, internally programmable TALKOVER. Affects OUT A and REC A
- Side rack mount ears with 2 possible positions, for front panel alignment with devices in the same rack

Technical Characteristics		SAM312	SAM412T	SAM512T	SAM614T
Inputs	LINE (1/2/3)	0dBV/50kΩ	0dBV/50kΩ	0dBV/50kΩ	-5dBV/47kΩ
	L LINE (4)	-5dBV/50kΩ	-5dBV/50kΩ	-5dBV/50kΩ	-5dBV/50kΩ
Sensitivity nom(*) Impedance	MIC BAL	-50(-30)dBV*/2.2kΩ	-50(-20)dBV/›1kΩ	-50(-30)dBV/2.2kΩ	-45dBV*/›1kΩ
	MIX	0(-10)dBV*/›20(›6)kΩ	0dBV›6kΩ	0(-10)dBV*/›20(›6)kΩ	-
Input sensitivity adjust	GAIN	-	-	-	±20dB
Outputs	OUT BAL	0(+6)dBV*/600Ω1(2)V	0(+6)dBV*/600Ω1(2)V	0(+6)dBV*/600Ω1(2)V	0(+6)dBV*/600Ω1(2)V
Level/Minimum load	OUT UNBAL	0(+6)dBV*/2.2kΩ1(2)V	0(+6)dBV*/2.2kΩ1(2)V	0(+6)dBV*/2.2kΩ1(2)V	0(+6)dBV*/600Ω1(2)V
	REC	0dBV/10kΩ	0dBV/10kΩ	0dBV/10kΩ	0dBV/10kΩ
	HEADPHONES	200mW/200Ω	-	200mW/200Ω	230mW/400Ω
Frequency response	LINE	10Hz-55kHz-1dB	10Hz-50kHz-1dB	10Hz-55kHz-1dB	10Hz-30kHz-1dB
	MIC BAL	10Hz-35kHz-1dB	10Hz-30kHz-1dB	10Hz-35kHz-1dB	10Hz-30kHz-1dB
Signal/Noise ratio	LINE	›100dB	›100dB	›100dB	›100dB
	MIC BAL	›85dB	›85dB	›85dB	›80dB
Tone control	BASS	100Hz±15dB	100Hz±15dB	100Hz±15dB	100Hz±12dB
	MID	2kHz±15dB	2kHz±15dB	2kHz±15dB	1.8kHz±15dB
	TREBLE	10kHz±15dB	10kHz±15dB	10kHz±15dB	10kHz±12dB

(*) Internally selectable

		SAM312	SAM412T	SAM512T	SAM614T
Talkover		-	TIME 1/2/3 seg*	TIME 1/2/3 seg*	RECOVERY TIME
		-	-30dB	EFFECT -30dB	2 (1-3) seg*
Phantom Voltage		+18VDC	+18VDC	+18VDC	+18VDC
Mains		90-264VCA 47-63Hz	90-264VCA 47-63Hz	90-264VCA 47-63Hz	90-264VCA
Power consumption		18VA	23VA	20VA	29VA
Dimensions	PANEL	482.6x44mm	482.6x44mm	482.6x44mm	482.6x44mm
	DEPTH	195mm	195mm	195mm	195mm
Weight		2.4kg	2.4kg	2.4kg	2.6kg

(*) Internally selectable

Versatile laptop and 19" installation mixers. Specially targeted to both non technical and expert users.

COMPACT5 Key features

- Universal 5 channel laptop and 19" installation rack mixer
- 8 LINE inputs, 3 MIC inputs, 2 PHONO inputs
- 2 independent MASTER (1x XLR / 1x RCA) and REC output
- 3 band equalizer per channel
- PFL monitoring. Talkover. Phantom power
- 45mm ECLER faders per channel

COMPACT8 Key features

- Universal 8 channel laptop and 19" installation rack mixer
- 3 Phono inputs
- 7 Stereo Line RCA inputs plus AUX (RCA) inputs in front panel
- 8 MIC (COMBO connector) inputs. Phantom power
- 2 independent outputs (XLR3 and RCA)
- Additional REC output
- 3 band tone control featuring mids 300Hz-6,5kHz semi-parametric equalisation
- Headphones output for PFL and MIX monitoring
- Extra bright 12 position VU-meter
- Assignable talkover with EFFICIENCY and TIME adjustments
- 60 mm high quality ECLER faders
- Specifically developed for applications requiring a large number of micro phone inputs

COMPACT8 back panel

Technical Characteristics		COMPACT5	COMPACT8
Inputs Sensitivity nom(*)Impedance	LINE (A-B-AUX)	0dBV/50kΩ	0dBV/50kΩ
	PHONO	-40dBV/50kΩ	-40dBV/50kΩ
	MICRO (BAL)	-50dBV/›1kΩ	-50dBV/›1kΩ
	MICRO ATT (BAL)	-	-30dBV/›1kΩ
Outputs Level/Minimum load	OUT 1 (BAL)	0dBV/600Ω 1V*	0dBV/600Ω 1V*(+6dB 2V)
	OUT 2	0dBV/2.2kΩ 1V*	0dBV/2.2kΩ 1V*(+6dB 2V)
	REC	0dBV/10kΩ	0dBV/10kΩ
	HEADPHONES	230mW/400Ω	200mW/200Ω
Frequency response	LINE	10Hz÷30kHz-1dB	10Hz÷30kHz-1dB
	MICRO BAL	10Hz÷25kHz-1dB	10Hz÷30kHz-1dB
	PHONO	RIAA±0.5dB	RIAA±0.5dB
Signal/Noise ratio	LINE	›100dB	›100dB
	MICRO	›85dB	›85dB
	PHONO	›90dB	›95dB

		COMPACT5	COMPACT8
Gain control all inputs	GAIN	±20dB	±20dB
Tone control	BASS	100Hz±12dB	90Hz
	MID	1.8kHz±15dB	300Hz÷6,5kHz±15dB
	TREBLE	10kHz±11dB	12kHz
Talkover	TIME	0,3/3 seg	0,3/3 seg
	EFFECT	0/-30dB	0/-30dB
Phantom Voltage		+18VDC/5mA max	+18VDC/5mA max
Mains		90-264VAC 47-63Hz	90-264VAC 47-63Hz
Power consumption		28VA	33VA
Dimensions	PANEL	482.6x132.5mm	482.6x177mm
	DEPTH	200mm	221,6mm
Weight		3.7kg	5.2kg

(*) Internally selectable

COMPACT5 Applications

- Pubs
- Night Clubs
- Retail Shops
- Fitness Centres

COMPACT8 Applications

- A/V presentations
- Entertainment music playback
- Meeting and seminar rooms
- Education Centres
- Mobile outdoor applications

5X4 AUDIO ANALOGUE MATRIX

WPm SERIES

MPAGE4

MIM054 is an audio matrix with 5 input sources and 4 zone outputs specially designed for multi-zone sound applications involving source selection and independent volume adjustments. It also includes priority signal and message management for generic and/or evacuation announcements.
Now, the recently upgraded MIM054 also allows for real-time paging applications, in combination with the optional MPAGE4 desktop paging station.

Key features

- 4 stereo program inputs (two allow MIC/LINE signals, the other two only LINE signals)
- 4 mono zone outputs with two-band tone controls for each output (accessible on the front panel using a screwdriver)
- Selectable Phantom power for the MIC inputs
- Fifth input signal (MIC/LINE) with priority (dual operating mode: PRIORITY/EVACUATION)
- PAGER connector for the MPAGE4 desktop paging station
- Source selection and independent output volume control (per zone)
- Remote control panels connectivity for source selection and zone volume adjustments
- Selection of local or remote zone control mode (from the front panel or from the remote control panels)
- Headphone monitoring section
- Euroblock connectors in inputs and outputs (input no. 1 also includes an XLR connector for the MIC/LINE L signal)
- Front panel controls can be replaced with security caps (included) to prevent undesired manipulation

Accessories

- **MPAGE4** four-zone desktop paging station
- **MPAGE1** single-zone desktop paging station
- **WPmMIX-T, MICRO+LINE** wall panel mixer with talkover function
- **WPmVOL, WPmVOL-SR** and the rest of wall panel remote controls in the WPm series (visit the WPm product page for more information)

Recommended amplification

- MPA multichannel series
- NXA multichannel networkable series
- HZA multichannel 100V line series
- HSA single channel 100V line series

Technical Characteristics

		MIM054
Inputs Sensitivity nom(*)Impedance	MIC BAL	-50(-20)dBV/>2kΩ
	LINE (1-2-5)	-10dBV/2kΩ
	LINE (3-4)	-10dBV/50kΩ
Outputs Level/Minimum load	OUTPUT BAL	0(+6)dBV*/600Ω1(2)V
	HEADPHONES	200mW/200Ω THD 1%
Remote		Analog control
Frequency response	LINE	5Hz-40kHz -3dB
	MIC BAL	5Hz-37kHz -3dB
Harmonic distortion	LINE	<0.08%
	MIC BAL	<0.1%
CMRR	MIC	>70dB@1kHz
Signal/Noise ratio	LINE	>110dB
	MIC BAL	>100dB
Tone control	BASS	100Hz±15dB
	TREBLE	10Hz±15dB

		MIM054
Talkover	TIME	1 / 2 / 3 seg*
	EFFECT	-20/-30/-80dB*
Phantom Voltage		+18VDC
Mains		90-264VCA 47-63Hz
Power consumption		29VA
Dimensions	PANEL	482.6x44mm
	DEPTH	195mm
Weight		2.7kg

(*) Internally selectable

Applications

- Multi-zone/multi-source management of public address systems with announcements and/or evacuation notices
- Sound in multi-use areas
- Sound with choice of source and remote and independent volume control (by zone)
- Corporate facilities
- Industrial facilities

INSTALLATION AUDIO DIGITAL MIXER

DAM614 is an audio digital mixer that comes after the great success of its predecessor, the DAM514, including many enhancements and new features. Thanks to them, it becomes a perfect choice for both profiles of end users: the ones that feel comfortable with analogue, even old-school audio devices and their touch, and the ones that prefer the digital world. In both cases, DAM614 amazing processing power is still there.
It includes 6 audio inputs and 4 audio outputs, front panel inputs and outputs level controls, DSP processing, RS-232 con¬nectivity and 4 REMOTE control ports (0-10VDC). Its 4 outputs can be used as mono independent zones or coupled as stereo zones. Regarding inputs, the first 2 are stereo LINE inputs, and the 3rd, 4th, 5th and 6th ones are MIC/LINE ready, being possible to use them independently (mono) or as stereo-coupled inputs.

Key features

- 2 stereo LINE inputs, RCA terminals
- 4 MIC/LINE inputs, balanced, Euroblock terminals. Can be configured to work independently (mono) or linked in couples to become a 3rd and/or a 4th stereo input
- 4 balanced audio outputs, Euroblock terminals: each output can work in single mode (mono zone) or linked with another output to become a stereo zone (A&B / C&D couples)
- DSP @ 24 bits / 48kHz
- Front panel LCD display, 2x20 characters and 10 front panel LED indicators (one for each input and output)
- 6 front panel input control digital knobs (one per input)
- 4 front panel output control digital knobs (one per output)
- 4 front panel keys, for parameters adjustment and menus navigation
- 4 REMOTE ports (0-10 VDC), ready for inputs or outputs volume control, source selection, presets recovery, etc., using WPm series wall panels
- PAGER port for real-time voice paging, using an MPAGE4 console unit
- MUTE port for one or several zones muting via external contact closure
- RS-232 Interface with EclerCOMM free application (http://www.ecler.com/en/products/ software.html) and CA-NET protocol compatibility (third-party integration)
- Processing:
  - Independent level control for each input and output
  - Independent mixer for each output zone: a different combination of inputs and levels (a mix) can be adjusted for each of the 4 available outputs
  - Independent 3 band tone control (BASS-MID-TREBLE) for each input
  - Crossover filters available for each output
  - Independent 10 band graphic EQ for each output
  - Independent and adjustable High-pass filter available for MIC/LINE inputs
  - 2 level priority PAGER / DUCKER function (emergency, paging, message delivery, etc.), triggered by MIC/LINE inputs
  - Independent Noise Gate function for MIC/LINE inputs
  - Independent Feedback Suppressor Function (feedback loops, or Larssen effect) for MIC/LINE inputs
  - Adjustable delay time for 2 outputs
- System templates to create new user configurations.
- 20 user presets and system templates to create new user configurations
- Three password-protected front panel lock modes.

Recommended amplification

- **MPA**, multichannel series
- **NXA**, multichannel networkable series
- **DPA** and **GPA** stereo series
- **HZA**, multichannel 100V line series
- **HSA**, 100V line series

Accessories

- **MPAGE4**, paging station
- **WPm**, series wall panel controls

Applications

- A/V corportate, retail and education applications
- BGM & Paging solutions, with message priorities and source/volume independent selection
- Integration in installation global control systems
- Conferencing
- P.A. management (multi-way speaker processing, delay adjustment, etc.)

Technical Characteristics		DAM614
INPUT 1, 2 (LINE)	Sensitivity	0 / -6dBV Internal jumper adjust. 0dBV factory default
	Input impedance	>13k
	Input connector	RCA female
INPUT 3, 4, 5, 6 (MIC)	Sensitivity	-20 / -50dBV External potentiometer adjust
	Input impedance	>24k electronically balanced
	CMRR	>55dB (20Hz ÷ 20kHz)
	Input connector	Terminal block (Symmetrical)
INPUT 3, 4, 5, 6 (LINE)	Sensitivity	0 / -6dBV Internal jumper adjust. 0dBV factory default
	Input impedance	>24k electronically balanced
	CMRR	>55dB (20Hz ÷ 20kHz)
	Input connector	Terminal block (Symmetrical)
ZONE OUTPUTS	Nominal output level	0dBV
	Output impedance	300Ω electronically balanced
	Output connector	Terminal block (Symmetrical)
A/D & D/A		24bit / 48kHz
FREQUENCY RESPONSE		<10Hz ~ 20kHz (+0dB / -0.5dB)
OUTPUT NOISE FLOOR (FFT)		>110dB (from 20Hz to 20kHz)
THD + NOISE		< 0.0058% (1kHz, 1Vrms)
CROSSTALK		>90dB, 20Hz ÷ 20kHz
INPUT EQ	Type	Baxandall 3 ways EQ

		DAM614
INPUT EQ	Gain	-10dB ~ +10dB in 0.1dB steps
	Frequency	Low 200Hz Mid 1kHz High 6.3kHz
INPUT 3, 4, 5, 6 TALKOVER	Type	Assignable to any output zone. 2 priority leve
	Modes	Ducker / Pager (only input 6)
	Threshold	-80 / +12dBV
	Depth	0 ~ 80dB
	Attack time	5 ~ 2000ms
	Hold Time	10 ~ 3000ms
	Release time	50 ~ 3000ms
	Chime (only input 6)	ON / OFF. Variable volume. Two different melodies
INPUT 3, 4, 5, 6 NOISE GATE	Threshold	-80 / +12dBV
	Depth	0 ~ 80dB
	Attack time	0.1 ~ 500ms
	Hold Time	10 ~ 3000ms
	Release time	10 ~ 1000ms
INPUT 3, 4, 5, 6 OTHER OPTIONS	Feedback suppressor	Frequency shifter type
	High pass filter (hum & pop suppressor)	50 ~ 150 Hz 12dB/oct Butterworth
ZONE OUTPUT EQ	Type	10 band EQ
	Filters	Adaptable Q to achieve maximum flat response
	Gain	-10dB ~ +10dB step 0.1dB
	Frequencies	31, 63, 125, 250, 500, 1k, 2k, 4k, 8k, 16k Hz

		DAM614
ZONE OUTPUT-CROSSOVER FILTERS	Type	Low & High Pass Butterworth 12 dB/oct
	Frequency	20Hz ÷ 20kHz
ZONE OUTPUT COMPRESSOR	Threshold	-36 / +12dBV
	Ratio	1:1 ~ 1:inf (LIMITER)
	Knee	Hard / Soft
	Attack time	0.1 ~ 500ms
	Release time	10 ~ 1000ms
	Make-up gain	0dB ~ +10dB
ZONE OUTPUT DELAY	Delay Time	10 ~ 1000ms (10 ~ 343,4m)
	Units	Milliseconds, seconds, centimeters, meters
EXTERNAL MUTE	Configuration	Normally open. Assignable to any output zone
REMOTE CONTROLS	Remote type	WPmVOL-SR. Up to 4 remotes
	Configuration	Input volume
		Zone volume
		Input selector
		Preset selector
		Matrix Volume
GENERAL	Mains	90÷264VAC 50/60Hz
	Power consumption	20VA
	Dimensions WxHxD	482.6x44x120mm
	Weight	2.00kg

8X8 AUDIO DIGITAL MATRIX

MIMO88

NEW! FREQUENCY SHIFTER
Function to avoid feedback loops
(Larssen Effect)

MIMO88 is an 8 in / 8 out digital audio matrix, fully programmable and linkable to a second unit to become a 16x16 matrix, with real routing from any input to any output. It can be configured and managed via Ethernet with the included EclerNet Manager software, also offering many other external control options: networked webserver-webclients control system (a graphical, custom-made screen for each user, run from computers, tablets, smartphones, etc.), TP-NET third-party control protocol for the integration with external control hardware like Crestron®, AMX®, RTI®, etc., digital WPTOUCH wall panels, digital MPAGE16 paging station, 8 GPIO ports, etc. using the MIMO88 Ethernet or RS-232 ports.

Key features

- 8 MIC/LINE balanced inputs, with phantom power selection and mono or stereo management
- 8 balanced outputs with mono or stereo management
- 2 additional monitoring outputs
- Expandable to 16 inputs / 16 outputs to become a real 16 x 16 matrix (using the digital audio bus between MIMO88 units, a CAT5 connection which can handle 100 meter distances)
- Ethernet and RS-232 comm ports
- 8 GPI ports (General Purpose Inputs): 0-10 VDC control inputs assignable to MIMO functions, like volume control, MUTE, preset recall, etc.
- 8GPO ports (General Purpose Outputs): relay contacts to remote control external devices, like motors, lights, etc.
- Digital control bus for the WPTOUCH (digital touch-sensitive) wall panel and the MPAGE16 (digital & touch sensitive paging station)
- Fully programmable and controllable via EclerNet software (with a straight PC-MIMO88 cable connection or by means of an Ethernet network)
- Ethernet remote control, based on webserver multiple clients: the EclerNet Manager projects can include several control panels, which have been customised for the needs of each user. The panels can be recalled and operated from client devices such as computers, tablets, smartphones, etc. (an Internet browser is used as the client app.)
- A few processing bits: signal generator, delays, full parametric EQ filters at inputs and outputs, inputs noise gate, level, mute, phase, vu-meters, outputs compressor / limiter, ducking (priority & overriding), virtual and physical paging stations management, automatic mixer function, presets save & recovery, scheduled events triggering
- NEW! FREQUENCY SHIFTER function to avoid feedback loops (Larssen Effect). Available for each INPUT channel

Applications

- Centralized, distributed or hybrid fixed installation
- BGM & Paging solutions, with message priorities and source/volume independent selection
- Integration in installation global control systems
- Conferencing (automatic mixing)
- P.A. management (multi-way speaker processing, delay adjustment, etc.)
- Installations requiring remote supervision, diagnostic and adjustment via Internet
- Live sound (WiFi management is possible from a PC, tablet, smartphone, etc.)

Accesories

- **MPAGE16** touch-sensitive digital paging station
- **WPTOUCH** touch-sensitive digital wall panel control
- **WPmSCREEN** touch-screen wall panel
- **WPmMIX-T**, **MICRO+LINE** wall panel mixer with talkover function
- **WPm**, series wall panel controls

Recommended amplification

- **MPA**, multichannel series
- **NXA**, multichannel networkable series
- **DPA** and **GPA** stereo series
- **HZA**, multichannel 100V line series
- **HSA**, 100V line series

The new MIMO88 CONFERENCE has been specially designed for those applications that involve conferencing, microphone automatic mix processing and feedback loops (Larsen effect) cancellation.

The MIMO88 CONFERENCE version presents these peculiarities compared to the MIMO88 standard version:

- Identical hardware for both versions
- Different firmware for the standard and conference version

Therefore, any MIMO88 hardware unit (existing or new one) can get a firmware upgrade to be converted into a MIMO88 standard unit or into a MIMO88 CONFERENCE unit. The upgrade process is fast, simple and straightforward, and can be done as many times as required.
This is an incredible advantage in terms of flexibility: keeping a single physical stock for the MIMO88 hardware units, it's possible to deliver to customers one or the other version, depending on the project it will belong to.
On top of the new features included, most of the standard MIMO88 features are still available in the CONFERENCE version, like presets management, events management, GPIO analogue remote control, digital remote control via WPTOUCH, TP-NET external control via Ethernet or RS-232, etc.

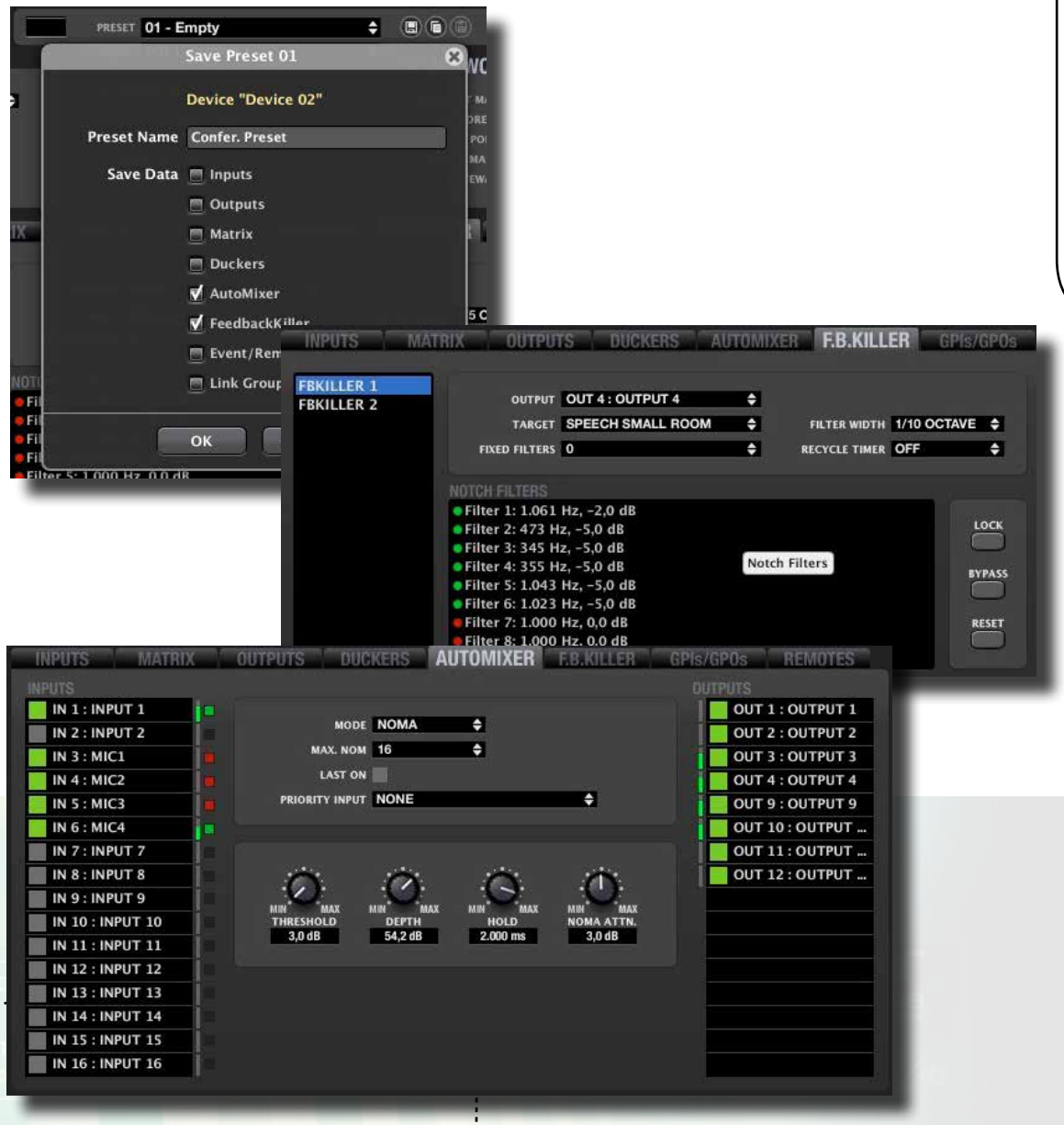

AUTOMIXER section Key features
(see EclerNet Manager user manual for further information)

- 8x8 configuration: up to 4 independent output mixes & 4 auxiliary outputs
- 16x16 configuration: up to 8 independent output mixes & 8 auxiliary outputs
- Two working modes:
  - NOMA ("Number of Open Microphones Attenuated"): in this mode, the automatic mixing algorithm allows a fixed number of input signals (usually microphones) to become simultaneously part of the mix, reducing or increasing their total gain automatically
  - EXCLUSIVE: in this mode only a single microphone is part of the mixer channel at a given moment, once the algorithm considers that it complies with its requirements. Another microphone can be used when the first one has released the channel
- Full set of working parameters: MAX. NOMA, LAST ON, PRIORITY, THRESHOLD DEPTH, etc.

FEEDBACK KILLER section key features
(see EclerNet Manager user manual for further information)

- 2 automatic notch filter banks
- 8 notch filters included in each bank
- Fixed / dynamic filters free configuration
- Filter WIDTH, RECYCLE TIMER, LOCK, RESET and BYPASS parameters
- 4 working mode presets

8X8 AUDIO DIGITAL MATRIX

MIMO88SG (MIMO88 SINGLE) is an EclerNet digital audio device that keeps the heart and soul of the standard MIMO88, its main features and its audio quality, to become a simplified and cost-effective version of this acclaimed digital matrix.

Key features

- 8x8 digital matrix (not expandable)
- 8 MIC/LINE balanced inputs and 8 balanced outputs, with mono or stereo management
- Ethernet and RS-232 communication interfaces
- 8 GPI ports (General Purpose Inputs): 0-10 VDC control inputs assignable to MIMO functions, like volume control, MUTE function, preset recall, etc.
- Digital control bus to connect up to 16 WPTOUCH units (digital touch-sensitive wall panel) and 3 MPAGE16 units (digital & touch sensitive paging station)
- Fully programmable and controllable via EclerNet software (directly wired to a PC or by means of an Ethernet network)
- UCP (User Control Panels) remote control system, compatible with WPmSCREEN and third-party devices, such as computers, tablets, smartphones, etc.
- TP-NET protocol compatible, for third-party control systems integration
- A few processing bits: signal generator, delays, full parametric EQ filters at inputs and outputs, inputs noise gate, level, mute, phase, vu-meters, outputs compressor / limiter, paging and ducking (priority & overriding), virtual and physical paging stations management, presets save & recovery, scheduled events triggering, etc.
- FREQUENCY SHIFTER function to avoid feedback loops, available in 4 inputs
- STANDARD and CONFERENCE firmware versions available

Accesories

- **MPAGE16** touch-sensitive digital paging station
- **WPTOUCH** touch-sensitive digital wall panel control
- **WPmSCREEN** touch-screen wall panel
- **WPmMIX-T**, **MICRO+LINE** wall panel mixer with talkover function
- **WPm**, series wall panel controls

Recommended amplification

- **MPA**, multichannel series
- **NXA**, multichannel networkable series
- **DPA** and **GPA** stereo series
- **HZA**, multichannel 100V line series
- **HSA**, 100V line series

Applications

- A/V corporate, retail and education applications
- BGM & Paging solutions, with message priorities and source/volume independent selection
- Integration in installation global control systems
- Conferencing
- P.A. management (multi-way speaker processing, delay adjustment, etc.)

Technical Characteristics		MIMO88SG
DSP	DSP	2X 32/64 bit
	Sampling rate	48kHz
	Latency IN to OUT	<2.9ms (+1ms for 16 x 16)
Converters	Resolution	24 bit AKM
	Dynamic Range	AD:110dB, DA: 115dB
Analog	8+8 Input/Output	Terminal block (Symmetrical)
	Analog Input headroom	+27dBV = +30dBu
	Max. output level	+18dBV = +21dBu
	Input sensitivity @ 0dBV out	From -50dBV to +10dBV in 0.5dB step
	Input Impedance	Balanced, >4kΩ
	Phantom power	+42VCD, 5mA max. software switched
	Frequency response (-3dB)	5Hz to 24 kHz
	Flatness	Better than ±0.1dB
	THD+Noise @ 1kHz, 0BV input (line)	<0.004%
	THD+Noise @ 1kHz, -40dBV input (mic)	<0.008%
	Output Noise floor FFT (20Hz - 20kHz)	Better than 115dB
	Interchannel crosstalk (20Hz - 20kHz)	Better than 90dB (100dB typ.)
	Channel leakage (20Hz - 20kHz)	Better than 100dB (115dB typ.)
	CMRR 20Hz - 20kHz	65dB typ.

Processing	MIMO88SG
Input Level (x8)	Range: from Off to 0 dB
	Mute: Yes
	Signal Polarity reverse: Yes
	Metering: VU+clip pre & post fader
Output Level (x8)	Range: from Off to 0 dB
	Mute: Yes
	Solo: Yes
	Signal Polarity reverse: Yes
	Metering: VU+clip pre & post fader
Output Gain (x8)	Range: from 0 to +6 dB
Input Delay (x8)	from 0 to 1000 ms
	Units: sec/ms/m/cm.
Output Delay (x8)	from 0 to 1000 ms
	Units: sec/ms/m/cm.
Parametric Eq. Types (4 max per input)	Bypass / On-Off all channels
	Param Eq. Freq: 20Hz-20kHz;
	Gain: -60/+12 dB
(6 max per output)	Q: 0.3 to 200
	Low & High Shelf 6/12 dB/oct
	Low & High Pass 6/12 dB/oct
	All Pass 1/2 order

Processing	MIMO88SG
High & Low pass output Crossover filters (x8)	Bypass On-Off
	Butterworth in 6/12/18/24 dB/oct
	Bessel in 12/18/24 dB/oct
	Linkwitz-Riley in 12/24 dB/oct
Input Noise Gate (x8)	Bypass On-Off
	Threshold: from –80 dBV to +18 dBV
	Depth: 0 dB to 80 dB
	Knee: hard / soft
	Attack time: from 0,1 ms. to 500 ms.
	Hold time: from 10 ms. to 3000 ms.
	Release time: from 10 ms. to 1000 ms.
Input Compressor / Limiter (x8)	Bypass On-Off
	Threshold: from –36 dBV to +18 dBV
	Ratio: 1:1 to inf:1 (limiter)
	Knee: hard / soft
	Attack time: from 0,1 ms. to 500 ms.
	Release time: from 10 ms. to 1000 ms.
	Make up gain: from 0 to +10 dB
Input Frequency Shifter (x4) (Feedback Loop Reducer)	Available on IN1 to IN4. ON / OFF function

Processing	MIMO88SG
Output Limiter (x8)	Bypass On-Off
	Threshold: from –36 dBV to +18 dBV
	Ratio: inf:1 (limiter)
	Attack time: from 0,1 ms. to 500 ms.
	Release time: from 10 ms. to 1000 ms.
Built in Signal Generator	Sine: from 20 Hz to 20 kHz
	Polarity: from 20 Hz to 20 kHz
	White noise
	Pink noise
Stereo Linking	Adjacent input / output channels
	Linked processing
	Matrix routing linked
Mix Matrix	Size: 8x8
	Vol: Input, Output, Crosspoint
	Mute: Set/Clear individual, row, column, all
	Input /output Mono/stereo selector
	Meter: Input /output VU and clip
Pager (x3)	Input: IN1 to IN8
	Priorities: 3 (1 max, 3 min)
	Depth: 0 dB to 80 dB
	Attack time: from 0,1 ms. to 500 ms.

		MIMO88SG
Processing	Pager (x3)	Release time: from 10 ms. to 1000 ms.
		Chime Source: None, Melody 1, Melody 2
		Chime Volume: from –12 dB to 0 dB
Mechanical	Dimensions	482.6x44x266.5 mm
	Weight	3.5 kg
Supply	Mains	90-264VCA 47-63Hz
	Power consumption	75VA
Miscellaneous	Management Connectivity	Ethernet Base-Tx 10/100Mb Auto X-Over CAT5 up to 100m.
	Remote Bus	over twisted pairs; up to 1km (see specific specs.)
	GPI	8, from 0 to 10VDC or TTL level
	Aux. Power Supply for Remotes & GPI	+12VDC, 1.2A. max. (short circuit protected)
	Time and date retention (battery)	100 hours aprox. (ambient temperature dependant)
	RTC accuracy	±1 minute / month
SOFTWARE	EclerNet Manager	From v3.03r4 version.

MPAGE16

MPAGE16 is a digital paging station for the MIMO88. It features 21 touch-sensitive keys that, together with the MIMO88 hardware, allow for an easy, flexible and user-friendly configuration of a paging system that can coexist with other MIMO88 functions and with other control hardware and/or software control systems.
(for more information visit the MPAGE series product page)

Key features

- 16 zone selection keys
- SELECT ALL, CLEAR and PAGE keys
- Two user-defined functions keys (for recalling presets, for example)
- Gooseneck integrated microphone
- Several MPAGE16 or software (virtual) paging stations can work simultaneously (priorities and zones availability is managed by the MIMO88 software setup)

WPTOUCH

WPTOUCH digital wall panel control for zone source selection, preset recall, volume and MUTE control, etc. (see WPm series for more details about this and other available wall panel accessories)

WPTOUCH

MPAGE16

Technical Characteristics		MIMO88
DSP	DSP	2X 32/64 bit
	Sampling rate	48kHz
	Latency IN to OUT	<2.9ms (+1ms for 16 x 16)
Converters	Resolution	24 bit AKM
	Dynamic Range	AD:110dB, DA: 115dB
Analog	8+8 Input/Output	Terminal block (Symmetrical)
	2 monitor output	Terminal block (Symmetrical)
	Headphones related	Jack ¼
	Analog input headroom	+27dBV = +30dBu
	Max. output level	+18dBV = +21dBu
	Input sensitivity @ 0dBV out	From -50dBV to +10dBV in 0.5dB step
	Input impedance	Balanced, >4kΩ
	Phantom power	+42VCD, 5mA max. software switched
	Headphones	>200mW/200Ω
	Frequency response (-3dB)	5Hz to 24 kHz

		MIMO88
Analog	Flatness	Better than ±0.1dB
	THD+Noise @ 1kHz, 0BV input (line)	<0.004%
	THD+Noise @ 1kHz, -40dBV input (mic)	<0.008%
	Output Noise floor FFT (20Hz - 20kHz)	Better than 115dB
	Interchannel crosstalk (20Hz - 20kHz)	Better than 90dB (100dB typ.)
	Channel leakage (20Hz - 20kHz)	Better than 100dB (115dB typ.)
	CMRR 20Hz - 20kHz	65dB typ.
Mechanical	Dimensions	482.6x44x266.5 mm
	Weight	3.5 kg
Supply	Mains	90-264VCA 47-63Hz
	Power consumption	75VA

ECLERNET TOUCH-SCREEN WALL PANEL

WPmSCREEN is a remote control panel compatible with all the EclerNet products, like MIMO88, and NXA series. It features a 7" touch-screen and an integrated UCP (User Control Panel) client and server hardware: no computer is required to run an EclerNet project and become a UCP webserver, once one or more WPmSCREEN units are installed in an EclerNet project. Each unit can be configured by means of the UCP control system as a local zone control or as a global control, as they are totally compatible with the standard UCP panels architecture,
and also with third-party UCP clients (iOS©, Android©, Windows©, etc.).

WPmSCREEN includes a surface mount installation box, and is as well compatible with standard recessed boxes and the VESA75 mount system.

Applications

Remote control for installations including EclerNet devices:

- Direct control of MIMO88, NXA, NZA, etc. devices (EclerNet devices), point to point (direct CAT5 cable, no network involved)
- Network control of a full EclerNet installation, including several MIMO88, NXA and/or other EclerNet devices
- Centralized, distributed or hybrid fixed installation
- BGM & Paging solutions, with message priorities and source/volume independent selection
- Integration in installation global control systems

Power Supply and Ethernet connections

Technical Characteristics		WPmSCREEN
SCREEN	Display technology	a-Si TFT active matrix
	Size	7" (diagonal)
	Resolution	800x480
	Color	24-bits RGB
	Contrast ratio	500:1
	Touch panel	4 wire Resistive. Can be operated with finger or stylus
	Active area	154 x 86 mm.
	Backlight	LED
	Viewing angle 6 o'clock direction	70 degree
	Viewing angle 12 o'clock direction	50 degree
CONNECTIVITY	Ethernet port	Ethernet Base-Tx 10/100Mb Auto X-Over CAT5 up to 100m.
POWER	Supply voltage	24V DC
	DC current (max)	150mA
	AC power adapter	90-264VAC 47-63Hz
	Mains power consumption	5W
GENERAL	Bracket mounting holes	VESA 75mm
	Dimensions WxHxD	216x159x36mm
	Weight	550g
	Flush-mount cavity	200 x 140 x 50 mm (for SIMON 51020103-039 or equivalent box, not included)

ALMA24 and ALMAcard are digital loudspeaker managers including 2 audio inputs and 4 audio outputs, USB interface and 2 volume remote control ports (0-10VDC). ALMA24 is a 1RU stand-alone processor, meanwhile ALMAcard is its card plug-in interface version, compatible with the DPA amplifier series (it is inserted into its rear panel interface card bay.

Key Features

- 2 audio inputs and 4 audio outputs, all balanced
- 24 bits / 48 kHz DSP processing
- 2 REMOTE ports for inputs or outputs remote volume management using WPm or compatible wall panels (0-10 VDC)
- USB interface and EclerCOMM Manager compatibility (free download from http://www.ecler.com/en/products/software.html)
- DSP processing:
  - GAIN, MUTE, POLARITY, etc., per input or output
  - 8 parametric EQ filters per input / 8 parametric EQ filters per output
  - Butterworth, Linkwitz-Riley or Bessel Crossover filters at inputs and outputs (up to 48 dB / oct)
  - Inputs and outputs delay
  - Peak compressor / limiter at inputs, including make-up gain
  - Peak compressor / limiter at outputs, including make-up gain
  - RMS compressor / limiter at outputs, including make-up gain
  - 2 LINK groups (output channels link)
- System templates to create user configurations:
  - T1: 2 x 1 way stereo
  - T2: 2 way stereo
  - T3: 4 way mono
  - T4: 4 mono outputs (1:4 splitter)
- 20 user Presets
- Labels' edition (inputs, outputs, presets and device)
- Password protection system

Technical Characteristics		ALMA24
INPUT SECTION	Input impedance	›20k electronically balanced
	CMRR	›55dB (20Hz ÷ 20kHz)
	Input connector	XLR3 female
OUTPUT SECTION	Output impedance	300Ω electronically balanced
	Output connector	XLR3 male
A/D & D/A		24bit / 48kHz
Frequency response		‹10Hz ~ 20kHz
Output noise floor (FFT)		‹-115dB (from 20Hz to 20kHz)
THD + Noise		‹0.0028% (1kHz, 1Vrms)
Crosstalk		›95dB, 30Hz ÷ 20kHz
Distortion @ odbV 20Hz-20kHz		‹0.008%
CROSSOVER FILTERS	Slopes	6, 12, 18, 24 or 48dB/octave (Filter type dependant)
	Type	Linkwitz-Riley, Butterworth or Bessel
DELAYS	Input delay / step	1seg / 20,8µs
	Output delay / step	1seg / 20,8µs
EQ	Input EQ quantity	4 per channel
	Output EQ quantity	8 per channel

		ALMA24
Parametric EQ: Type		Parametric EQ: Q: 0.3 to 200
		Low & High Shelf 6/12 dB/oct
		Low & High Pass 6/12 dB/oct
		All Pass order 1 or 2
	Gain	-60 dB ~ +12dB step 0.1dB
	Frequency	20Hz ÷ 20kHz
COMPRESSOR		
	Threshold	-36 / +12dBV
	Attack time	0.1 ~ 500ms
	Release time	1 ~ 5s
	Ratio	1:1 to ∞ :1
GENERAL		
	Mains	90÷264VAC 50/60Hz
	Power consump.	16VA
	Dimensions WxHxD	482.6x44x120mm
	Weight	1.75kg

Applications

- Permanent installation management system
- Live sound. Monitor management
- Stereo bi-amped general applications

Accessories

- **WPm series** volume remote control panels

DIGITAL PROCESSORS

ALMA 26

ALMA26 is a digital loudspeaker manager including 2 audio inputs and 6 audio oputputs, USB interface and 2 volume remote control ports (0-10VDC).

Key features

- 2 audio inputs and 6 audio outputs, all balanced, XLR connectors
- 24 bits / 48 kHz DSP processing
- 2x20 characters front panel LCD display
- 4 front panel configuration keys + digital encoder
- 1 backlit front panel key for each input and output (MUTE, ASSIGN and EDIT functions)
- Inputs and Outputs front panel vumeters
- 2 REMOTE ports for inputs or outputs remote volume management using WP or compatible wall panels (0-10 VDC)
- USB interface and EclerCOMM Manager compatibility (free download from http:// www.ecler.com/en/products/software.html)
- DSP processing:
  - GAIN, MUTE, POLARITY, etc., per input or output
  - 4 parametric EQ filters per input / 8 parametric EQ filters per output
  - Butterworth, Linkwitz-Riley or Bessel Crossover filters at outputs (up to 48 dB / oct)
  - Inputs and outputs delay
  - Compressor / limiter at outputs, including make-up gain
  - 3 LINK groups (output channels link)
- System templates to create user configurations:
  -T1: 3 x 1 way stereo
  -T2: 2 way stereo + 1 way stereo
  -T3: 3 way stereo
  -T4: 4 way mono + 2 mono auxiliar outs
  -T5: 5 way mono + 1 mono auxiliar out
  -T6: 6 way mono (1:6 splitter)
- 20 user Presets
- Labels' edition (inputs, outputs, presets and device)
- Password protection system with 2 security modes

Technical Characteristics		ALMA26
INPUT SECTION	Input impedance	›20k electronically balanced
	CMRR	›55dB (20Hz ÷ 20kHz)
	Input connector	XLR3 female
OUTPUT SECTION	Output impedance	300Ω electronically balanced
	Output connector	XLR3 male
A/D & D/A		24bit / 48kHz
FREQUENCY RESPONSE		‹10Hz ~ 20kHz
OUTPUT NOISE FLOOR (FFT)		›115dB (from 20Hz to 20kHz)
THD + NOISE		‹ 0.0028% (1kHz, 1Vrms)
CROSSTALK		›95dB, 30Hz ÷ 20kHz
CROSSOVER FILTERS	Slopes	6, 12, 18, 24 or 48dB/octave (Filter type dependant)
	Type	Linkwitz-Riley, Butterworth or Bessel
DELAYS	Input delay / step	1seg / 20,8µs
	Output delay / step	1seg / 20,8µs

		ALMA26	
EQ	Input EQ quantity	4 per channel	
	Output EQ quantity	8 per channel	
	Parametric EQ	Type	Parametric EQ: Q:03 to 200
			Low & High Shelf 6/12 dB/oct
			Low & High Pass 6/12 dB/oct
		Gain	-6dB ~ +12dB step 0.1dB
		Frequency	20Hz ÷ 20kHz
COMPRESSOR	Threshold	-36 / +12dBV	
	Attack time	0.1 ~ 500ms	
	Release time	1 ~ 5s	
	Ratio	1:1 to ∞ :1	
GENERAL	Mains	90÷264VAC 50/60Hz	
	Power consumption	25VA	
	Dimensions WxHxD	482.6x44x120mm	
	Weight	1.75kg	

Applications

- Permanent installation management system
- Live sound. Monitor management
- Stereo bi or tri-amped general applications

Accessories

- See WPm series, volume remote control panels

CA40, CA120, CA120 HZ

AV INTEGRATION MICRO-AMPLIFIERS

The **CA40** and **CA120** are stereo amplifiers with a tiny size but amazing remote control features: serial RS-232 port, IR receiver and 0-10 VDC remote port.

CA120HZ is the high impedance version of the CA120, delivering 120W @ 70/100V line level, a technology which is especially suitable for long loud-speaker wire runs and/or an amount of loudspeaker units far beyond the 2 or 4 units typically connected to a low impedance amplifier.
They're an ideal solution in those audiovisual applications which require inte-gration with external control devices: education classrooms, meeting rooms, multimedia presentations, retail shops, etc.

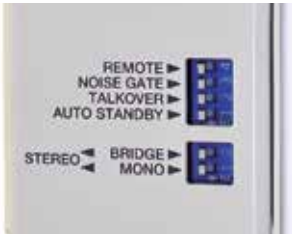

CA40 configuration switches

Technical Characteristics		CA40	CA120	CA120Hz
POWER	STEREO	2x18W @ 4Ω - 1% THD	2x56W @ 4Ω 1% THD	
		2x22W @ 4Ω - 10% THD	2x68W @ 4Ω 10% THD	
		2x10W @ 8Ω - 1% THD	2x34W @ 8Ω 1% THD	
		2x12W @ 8Ω - 10% THD	2x41W @ 8Ω 10% THD	
	BRIDGE	1x36W @ 8Ω - 1% THD		
		1x44W @ 8Ω - 10% THD		
POWER (100V OUTPUT)	MONO			96W @ 100Ω 1% THD
Frequency response		20Hz - 50kHz (-3dB)	15Hz - 30kHz (-3dB)	50Hz - 30kHz (-3dB)
THD+Noise @ 1kHz Full Pwr. SPKR OUT		‹ 0.15%		‹ 0.09%
THD+Noise AUX OUT		‹ 0.02%		
Channel crosstalk @ 1kHz		› 55dB	› 65dB	
Inputs Sensitivity nom/Impedance	LINE 1	0dBV (-6dBV*) / › 8kΩ		
	LINE 2	0dBV (-6dBV*) / › 8kΩ		
	LINE 3	0dBV (-6dBV*)/ ›8kΩ		
	MIC (BAL)	-20 to -50dBV / › 1kΩ		
CMRR	MICRO (BAL)	› 65dB @ 1kHz		
High Pass Filter		50Hz – 70Hz		
Outputs Level/Minimum Load	AUX OUT	-6dBV / 10kΩ	-2dBV / 10kΩ	

*Internally selectable ** Software selectable

		CA40	CA120	CA120Hz
Tone control (LINE & MIC)	BASS	100Hz ± 10dB		
	TREBLE	6KHz ± 10dB		
Signal Noise Ratio	LINE	› 85dB		› 70dB
	MIC (BAL)	› 65dB		› 50dB
Talkover	TIME	2 Seconds		2 Sec.**
	DEPTH	-30dB		-30dB**
Microphone Noise Gate		20-30dB below max.**		
Phantom voltage		+24VDC / 10mA max.*		
RS232	BAUD RATE	9600 (fixed)		
	DATA	8 bits		
	PARITY	NONE		
	STOP BITS	1		
	FLOW CTRL	NONE		
ANALOG REMOTE (0-10V. based)		Volume & Input/preset** selection		
INFRARED REMOTE		Volume & Mute		
DC Supply				24V
Mains (using Meanwell GS60A24-P1J)		90-264VAC / 47-63Hz		
Mains (Using supplied DC adapter)				90-264VAC 47-63Hz
Power consumption	(pink noise, 1/8 power @ 4Ω)	21VA / 7W		33VA/24W
	(pink noise, 1/3 power @ 4Ω)	32VA / 13W	58VA/52W	
	Stand By (time 2 minutes)	‹ 3W	‹ 2.5W	
Dimensions WxDxH		155x155x45 mm	160x210x48mm	160x325x48mm
Weight		0.65 Kg	950g	2.92Kg

AV INTEGRATION MICRO-AMPLIFIERS

CA40, CA120, CA120 HZ

Free EclerCOMM Manager software application available

Main characteristics

- 2 x 20 W RMS @ 4 Ω amplifier (CA40)
- 2 x 60 W RMS @ 4 Ω amplifier (CA120)
- 1 x 120 W RMS @ 70/100V (CA120HZ)
- External, universal power supply
- AUTO STANDBY function
- Light and silent (fanless) design
- STEREO, PARALLEL and BRIDGE output modes for CA40
- STEREO / PARALLEL output modes for CA120
- MONO output mode for CA120HZ
- 1 balanced MIC input, with Phantom power and high-class preamp, including noise gate and talkover function over the rest of inputs (CA40)
- 1 balanced MIC / ST LINE unbalanced input, with Phantom power and high-class preamp, including noise gate and talkover function over the rest of inputs (CA120 and CA120HZ)
- 2 unbalanced LINE inputs
- 2-band tone control (Bass, Treble) independent, for the MIC/LINE and LINE buses
- AUX output for external link to other devices or amplifiers
- Digital local control, encoder type
- Infrared remote control included
- Remote control compatible with WPmVOL and WPmVOL-SR wall panels (0-10 VDC)
- RS-232 control port compatible with CA-NET protocol
- MUTE port for external muting of the unit when an evacuation system must be activated
- Presets / sources management via RS-232 or 0-10 VDC remote control port

Accessories

- **WPm** series wall panel controls
- **MPAGE1** desktop paging station

Recommended loudspeaker selection

- **AUDEO** series
- **AMBIT** series
- **IC** in-ceiling series
- **ICPLUS** in-ceiling series

Applications

- Classrooms
- Meeting rooms
- Multimedia presentations (in combination with video projectors, screens, etc.)
- Retail shops
- Museums and exhibitions
- Integrated AV systems with central remote control system (Crestron©, Extron©, AMX©, etc.)

AV INTEGRATION DIGITAL MIXING AMPLIFIER

The CA200z is a compact digital mixing amplifier with 2 output zones and 6 audio inputs, together with a full and smart set of remote control options. It is a perfect solution in many applications: an all-in-one audio device in retail shops, multimedia, presentation and education projects that can be perfectly integrated with external control devices, from Ecler and from third-party players.

Key features

- 2 x 70 W RMS @ 4 Ω amplifier
- STEREO, MONO, BRIDGE or independent ZONES A/B working modes
- 4 LINE stereo inputs. Each independent audio output (ZONE A or B) can have its own LINE source selection among these 4 options, with independent VOL and independent tone control
- 2 MIC balanced inputs. MIC1 and/or MIC2 can be sent independently to ZONE A or ZONE B, using the Talkover or Pager feature or not (straight mix)
- 2-level Talkover / Pager priority system (MIC1 and 2 can have the same or different priority level)
- MIC1 and MIC2 with Phantom power and independent Noise Gate and Talkover / Pager functions, with adjustable thresholds, attenuation, attack times, etc.
- Additional PAGER input for the connection of the MPAGE4 desktop paging station
- MIC2 and LINE2 inputs doubled on front panel , with jack and mini-jack connectors
- AUX A/B LINE output, for the connection to external amplifiers or mixers / matrixes
- Front panel LCD display
- Digital rotary encoder for zone selection, volume management and the basic and advanced setup modes browsing
- Direct access selection keys for the LINE and MIC inputs
- ON / STANDBY, Signal Present and CLIP LED indicators
- RS-232 interface for external (third-party) remote control. CA-NET protocol compatible
- 2 REMOTE ports included, compatible with WPm series (0-10 VDC), one for each output zone: volume and source / preset selection
- IR receiver (IR remote control included)
- 5 Preset working memories, recoverable by means of the front panel controls, IR remote control, WPmVOL-SR panel or RS-232 interface
- Auto start-up preset recovery function
- Front panel LOCK mode to avoid unwanted manipulation
- LCD display with ON, OFF and DIMMED idle modes
- 2 x 70 Wrms power, class D amplifier. It can also work in BRIDGE mode
- Universal Switching Power Supply
- Auto stand by function (these last 4 features make it a real Green product)
- Size: half-rack width, compatible with the mini-racks used more and more in some applications, and also with standard full-rack width using the 2UHRMKIT optional kit

Optional TR2-70 transformer kit (70/100V lines adapter)

Free EclerCOMM Manager software application available

Recommended loudspeaker selection

- **AUDEO** series
- **AMBIT** series
- **IC** in-ceiling series
- **ICPLUS** in-ceiling series

Technical Characteristics

	CA200z	
POWER (each output)		70W@4Ω 1% THD
		38W@8Ω 1% THD
	BRIDGE	97W@8Ω 1% THD
Damping Factor 1kHz@8Ω		›140
Frequency response		15Hz - 40kHz (-3dB)
THD+Noise @ 1kHz Full Pwr. SPKR OUT		‹0.08%
THD+Noise AUX OUT		‹0.03%
Channel Crosstalk @ 1kHz		›60dB
Inputs Sensitivity nom/Impedance	LINE 1-4	0dBV (-6dBV*)/›10kΩ
	LINE 2	0DBV (-6dBV*)/›8kΩ
	MIC 1-2 (BAL)	-20 to -50dBV/›1kΩ
CMRR	MIC 1-2 (BAL)	›65dB@1kHz
Outputs Level/Minimum Load	AUX OUT	-6dBV/10kΩ
Tone Control (LINE & MIC)	BASS	100Hz ± 10dB
	TREBLE	6KHz ± 10dB
Signal Noise Ratio	LINE	›85dB
	MIC (BAL)	›62dB
Talkover	TIME	2 Sec**
	DEPTH	-30dB**

	CA200z	
Microphone Noise Gate	DEPTH	20-25-30dB below max**
Phantom voltage		+24VDC/8mA max.*
RS232 DB9	BAUD RATE	9600 (fixed)
	DATA	8 bits
	PARITY	NONE
	STOP BITS	1
	FLOW CTRL	NONE
ANALOG REMOTE 1-2 (0-10V. based) INFRARED REMOTE		Volume & Input selection Preset, Source & Volume
Mains		90-264VAC 47-440Hz
Power consumption (pink noise, 1/8power @ 4ohm		62VA/30W
Power consumption (pink noise, 1/3 power @ 4ohm		78VA/61W
Power consumption (max. @ 4ohm)		240VA/160W
Power consumption Stand By (time 2 minutes)		‹8W
Dimensions WxDxH		210x230x88mm
Weight	Net	2340g
	Gross	3550g
***Internally selectable**		
**** Software selectable**		

Applications

- Classrooms
- Meeting rooms
- Multimedia presentations (in combination with video projectors, screens, etc.)
- Retail shops
- Museums and exhibitions
- Integrated AV systems with central remote control system (Crestron©, Extron©, AMX©, etc.)

Accessories

- **WPm** series wall panel controls
- **MPAGE4** desktop paging station
- **MPAGE1** desktop paging station
- **2UHRMKIT** optional rack mount kit

POWERED MEDIA MIXER

HMA120

Self-powered mixer including an integrated media player and 5 external audio inputs: 3 x LINE ST, 1 MIC/LINE and 1 MIC . It features a 120W powered output that supports both low (4 Ω) and high impedance (70V, 100V) loudspeaker lines. It also includes a 2 level priority system (paging, emergencies, etc.), auto stand-by mode, AUX OUT and an additional remote control port to manage the source selection and output volume by means of WPm series wall panels.
HMA120 is the perfect integral solution for user-friendly and budget audio projects.

Main Characteristics

- 1 balanced microphone input mixable with the selected music program (MIC1)
- 1 balanced microphone/line input mixable with the selected music program (MIC2/LINE)
- 3 line inputs for music sources
- Integrated audio player (supporting mp3 format) with USB and SD CARD slots for media storage devices
- Music program selector on the front panel: LINE1, LINE2, LINE3, MEDIA (integrated player)
- Noise gate and two-level priority system (Talkover 1 and Talkover 2) for MIC1 and MIC2/LINE inputs
- Independent level controls on the front panel for MIC1 and MIC2/LINE signals
- Independent level control on the front panel for the music program (MUSIC)
- 2-band EQ (BASS/TREBLE) for MIC1 and MIC2/LINE signals
- 2-band EQ (BASS/TREBLE) for the music program signal
- REMOTE port for connecting WPm series wall panels, 0 - 10VDC (source selection and volume control)
- MUTE port to remotely mute the unit from an external device, via dry contact closure
- Auxiliary Output
- Auto Stand-by function (auto-switching to low consumption mode in the absence of input signals)
- Amplified mono output @ low impedance, 120 WRMS (4Ω), and high impedance (70V/100V)

Applications

- Retail stores, restaurants and bars
- BGM & Paging solutions, with message priorities and source/volume independent selection

Technical Characteristics

		HMA120		
4Ω, 100V & 70V Output	Power		@1%THD (cold)	PEAK
		4Ω	110W	140W
		8Ω	84W	105W
		70V @ 41Ω	110W	140W
		100V @ 85Ω	110W	140W
	Frequency response	70Hz - 17kHz (-3dB/4Ω)		
	High Pass Filter	3rd order Butterworth	70 Hz	
	THD+Noise	@ 1kHz Full Power	<0.2%	
	Channel crosstalk	@ 1kHz	>70dB (Inputs shorted)	
AUX Output (L+R)	Output Level / Minimum Load		-6dBV / 10kΩ	
	Frequency response		15Hz - 40kHz (-1dB)	
LINE Inputs	Sensitivity / Nominal impedance	LINE 1-2	0dBV / >70kΩ	
		LINE 3	-6dBV / >70kΩ	
	Signal Noise Ratio		>87dB	
MIC Inputs	Sensitivity / Nominal impedance	MIC 1-2 (BAL)	-20 to -50dBV / >4.5KΩ	
		LINE* (BAL)	-0 to -30dBV / >4.5kΩ	
	CMRR	MIC 1-2 (BAL)	>70dB @ 1kHz	
	Signal Noise Ratio		>60dB	
	Phantom voltage/current		+15VDC / 8mA max.*	

			HMA120
Tone control (LINE & MIC)	BASS		100Hz ±10dB
	TREBLE		6KHz ±10dB
Remote	Type		WPmVOL-SR
	Volume	Analog control	0-10V (0V max volume)
	Input Selection	Analog control	OFF-1-2-3-4
Mute	Configuration		Normally open
Indicators	Signal Present	Trigger level	-35 dB
	Clip		
	Power On		
	Auto Standby	Trigger time	after 2 minutes without input signal
Supply	Mains voltage	See characteristics in the back of the unit.	
Power consumption	Pink noise, 1/8 power @ 4ohm		43VA/29W
	Pink noise, 1/3 power @ 4ohm		90VA/65W
	Maximum power @ 4ohm		213VA/168W
	Stand By		5W
	Dimensions WxDxH		210x230x88mm
	Weight	Net	5950g
		Gross	7160g

Accessories

- **2UHRMKIT** rack installation accessory (kit including 2 brackets)
- **MPAGE1** paging station
- **WPm** series wall panel controls

Recommended loudspeaker selection

- **AUDEO** series
- **AMBIT** series
- **IC in-ceiling** series
- **ICPLUS in-ceiling** series

HMA180

SELF-POWERED MIXERS

HMA180 is a self-powered installation Public Address mixer. It features a total of 9 audio inputs and a high / low impedance amplified output, together with an extensive set of control connections and features to be the perfect single-box solution in most projects involving background music, microphone signals, paging, pre-recorded messages and evacuation alarms.

Key features

- 4 MIC balanced inputs, with bus phantom power (selectable)
- 4 LINE inputs
- Independent 3 band EQ for the MIC inputs mix bus
- Independent 3 band EQ for the LINE inputs bus
- Pager & chime function, MIC1 input (voice level or contact closure activation)
- Additional EMERGENCY MIC/LINE input with independent features:
  - Selectable phantom power
  - 3 band EQ
  - Activation mode: VOICE / CONTACT
  - Independent output volume level (ignores the MASTER volume adjusted for the rest of the audio signals mix, assuring a pre-defined level for the emergency messages all over the installation)
  - Linkable to the included 24 VDC control output (to activate the priority relays in volume control wall panels)
- Remote Volume control port (0 – 10 VDC)
- Remote MUTE control port (to allow an external device MUTE the P.A. system completely)
- 24 VDC control output, linkable to the PAGER and/or EMERGENCY functions (to activate the priority relays in remote volume controls)
- Subsonic filter (@ 70 Hz)
- Insertion point in TRS format
- 8Ω , 70 V, 100 V powered output
- LINE level AUX output (allows for an external amplifier connection, like the HSA300 or HZA-F amps, in case that higher power is required)
- Class D 180 W amplifier, convection cooled (100% silent)
- Internal & universal Power Supply

Accessories

- **WPm** series wall panel controls
- **WPTOUCH** touch-sensitive digital wall panel control
- **MPAGE1** desktop paging station

Recommended loudspeaker selection

- **IC** in-ceiling series
- **ICPLUS** in-ceiling series
- **ECL** in-ceiling series
- **AUDEO** series
- **AMBIT** series

Applications

- BGM, Public Address & Paging solutions, with up to 9 audio inputs, message priorities and volume / EQ independent management

Technical Characteristics		HMA 180
Power output (8Ω, 70V & 100V steps)		125 WRMS @ 8Ω @ 1% THD
		145WRMS @ 8Ω @ 10% THD
Frequency response AUX OUT(-3dB)		8 Hz - 30 kHz
AMP OUT (-3dB)		30 Hz - 17 kHz
High pass filter 3rd order Butterworth		70Hz
THD + Noise @ 1 kHz Full power		<0.2%
Signal Noise Ratio @ 100V		>85dB
Inputs Sensitivity nom/ Impedance	PAGER/MIC 1,2,3,4	-50 (-20) dBV/ >2kΩ
	LINE 1,2,3,4,5	0 (-15) dBV/ >10kΩ
	INSERT	0dBV/ >10kΩ
Outputs Level/Minimum load	AUX OUT	0dBV/ >5kΩ
	INSERT	0dBV/ >2kΩ
CMRR Balanced Inputs		> 65dB@1kHz typ.
Tone control (all)	BASS	100Hz ±15dB
	MID	1.8kHz ±15dB
	TREBLE	10kHz ±15dB

		HMA 180
Indicators		Power
		-40dB at the output
		Clip
Remote		0-10V Analog Control
Control Inputs	Page/Emergency/Mute	N.O./ N.C.
Relay Control		+24V. /100mA. Max.
Talkover	TIME	1 / 2 / 3 s
	EFFECT	-20 /-30 / -80 dB
Phantom voltage		+15VDC /4mA. Max.
Chime		DIP selector for mode 1, 2 or 3 or none
Mains voltage		90 ~ 264VAC; 47 ~ 440Hz
Power consumption:	Pink noise, 1/8 power	69 VA / 34W
	Pink noise, 1/3 power	120 VA / 67W
	Full Power	260 VA / 160W
Dimensions:	Panel	482.6x88mm
	Depth (Handle excl.)	285mm
Weight		7kg

AMPLIFIERS

HSA300, HSA2-400

The **HSA300** is a single channel amplifier with direct 100 V line (high impedance) output. It's equipped with Ecler's proprietary SPM 100 Technology - Channel N, which allows for 100 V speaker lines connection without using 100 V line transformers, as this kind of amplifiers usually do. This fact has many advantages, being the main one the excellent audio quality, specially improved in the low-end frequencies when compared to classical 100V line amplifiers.

Key features

- 1 mono balanced input
- 1 x 260 W output (100V line level)
- Euroblock connectors
- SPM 100 amplification Technology - Channel N (no 100 V output transformers used):
  - Improved frequency response (specially at the low-end)
  - Great efficiency
  - Low weight
- Butterworth, 3rd order high pass filter @ 70Hz
- Thermal protection
- Overload protection
- Anti-clip system
- Volum control knobs on front panel with protection cap, against undesired manipulation

The **HSA2-400** is a stereo amplifier with low and high impedance powered outputs. A very high efficiency and an auto stand-by function provide this amplifier with a true green profile.

Key features

- 2 mono balanced inputs (XLR and Euroblock terminals)
- 2 x 400 W RMS output (4Ω and 70/ 100V line level)
- Euroblock output connectors
- 2 REMOTE volume ports (0-10VDC), compatible with WPm series wall panels
- High efficiency, auto stand-by function and convection cooling (fanless, 100% silent)
- Butterworth, 3rd order high pass filter @ 50Hz
- Thermal protection
- Overload protection
- Anti-clip system
- Volum control knobs on front panel with protection cap, against undesired manipulation

Technical Characteristics	HSA300	HSA2-400
Power output @ 100VRMS @ 32Ω	254 WRMS @ 32Ω	410 WRMS @ 25Ω
Power output @ 100VRMS 1%THD	302 WRMS @ 32Ω	N/A
Power output All Channels @ 25Ω	N/A	332 WRMS
Power output 1 Channel @ 4Ω	N/A	390 WRMS
Power output 1 Channel @ 8Ω	N/A	225 WRMS
Power output All Channels @ 4Ω	N/A	322 WRMS
Power output 1 Channel @ 2.666Ω	N/A	506 WRMS
Frequency response (-1dB, -3dB):	30Hz – 35kHz	20Hz - 30kHz
Filter (High-Pass) 3rd order Butterworth	70Hz	50Hz
THD+Noise @ 1kHz Full Pwr.	<0.07%	<0.05%
SNR	>85dB	
Damping factor 1kHz @ 8Ω	N/A	>360
Input Sensitivity / Impedance	0dBV/>20kW	

Applications

- Single or multi-zone BGM and paging systems with 100V line speakers, combined with the DAM, MIMO and SAM series preamplifiers / processors

Suggested loudspeakers

- **AUDEO** series
- **IC / ICPLUS** series
- **AMBIT** series
- **ECL106** series
- **IG108** in ground loudspeaker

	HSA300	HSA2-400
Mains voltage	See characteristics in the back of the unit	See characteristics in the back of the unit
Power consumption pink noise, 1/8 power pink noise, 1/3 power	 218VA @ 32Ω 319VA @ 32Ω	 196VA @ 4Ω 452VA @ 4Ω
Dimensions	482.6x88x285mm	482.6x88x373mm
Weight	8.4kg	16.4kg

HZA4-70F, HZA4-120F

FLEXI-POWER AMPLIFIER SERIES

The HZA4-70F and HZA4-120F are four MERGING channel amplifiers with direct 100 V line (high impedance) outputs. They integrate Ecler's proprietary SPM 100 Technology - Channel N, which allows for 100 V speaker lines connection without using 100 V line transformers at their amplified outputs, as this kind of amplifiers usually do. This fact has many advantages, being the main ones the audio quality improvement (specially in the low-end frequencies) and the convection cooling, 100% silent.

Key features

- 4 mono balanced inputs
- 4 x 70 W or 4 x 120 W amplified outputs (100V line level)
- 4 volume remote control ports (0 - 10 VDC)
- Euroblock connectors
- SPM 100 amplification Technology - Channel N (no 100 V output transformers used):
  - Improved frequency response (specially at the low-end)
  - Convection cooling (100% silent and increased reliability)
  - Great efficiency
  - Low weight
- Auto stand-by function after 2 minutes without audio input signals, with instantaneous auto-recovery
- Thermal protection
- Overload protection
- Anti-clip system
- Volume control knobs on front panel with protection cap, against undesired manipulation
- Every 2 adjacent channels can be merged, getting one out of these possible configurations in the case of the HZA4-70F:
  - 4 x 70W @ 100 V line outputs
  - 2 x 70W + 1 x 140 W @ 100 V line outputs
  - 2 x 140W @ 100 V line outputs
  - 1 x 70W + 1 x 210 W @ 100 V line outputs
  - 1 x 280W @ 100 V line output
- And these ones in the case of the HZA4-120F:
  - 4 x 120W @ 100 V line outputs
  - 2 x 120W + 1 x 240 W @ 100 V line outputs
  - 2 x 240W @ 100 V line outputs
  - 1 x 120W + 1 x 360 W @ 100 V line outputs
  - 1 x 480W @ 100 V line output

Applications

- Multi-zone BGM and paging systems with 100V line speakers, combined with the MIMO54, DAM614 and MIMO88 matrixes and SAM series preamplifiers

Technical Characteristics

		HZA4-120F		HZA4-70F	
		1%THD	10% THD	1%THD	10% THD
Output power:	1 Channel	114WRMS@88Ω	145WRMS@88Ω	74WRMS@136Ω	93 WRMS @ 88Ω
	2 Merged Channels	195WRMS@50Ω	226WRMS@50Ω	140WRMS@72Ω	163 WRMS @ 50Ω
	3 Merged Channels	290WRMS@32Ω	348WRMS@32Ω	204WRMS@50Ω	245 WRMS @ 32Ω
	4 Merged Channels	356WRMS@26Ω	430WRMS@26Ω	260WRMS@38Ω	312 WRMS @ 26Ω
Frequency response (-3dB)		30Hz - 55kHz			
High Pass filter 3rd order Butterworth		70Hz			
THD + Noise @ 1 kHz Full power		<0.03%typ. 0.2% max.			
Signal Noise Ratio @ 100V		>90dB			
Channel Crosstalk @ 1kHz/100V		>90dB			
Inputs:	Sensitivity nom/Impedance	0dBV/>20kΩ			
	Connectors	Terminal Block (Symmetrical)			
Outputs:	Connectors	Terminal Block			
Indicators:	Power	Green (ON), Red (Standby)			
	Signal present	-35dB			
	Clip				
	Overload				
	Thermal				
	Merge				

		HZA4-120F	HZA4-70F
Remote control:	DC	0-10V/0.1A max	
	No attenuation	0V	
	Full attenuation	+10V	
	Connectors	Terminal block	
Auto Power:	Threshold	>-30dB aprox	
	Time	100 sec. aprox	
Mains Voltage:	Depending on your country	Depending on your country. See	
	See characteristics in the back of the unit	characteristics in the back of the unit	
Power consumption:	pink noise, 1/8 power @ 136©	340VA	298VA
	pink noise 1/3 power @ 136©	470VA	407VA
	Standby	<3W	
Dimensions:	Panel	482.6x88mm	
	Depth (Handle excluded)	392mm	
Weight:		13.60kg	TBA

Suggested 100V line speakers

- **AUDEO** series
- **IC / ICPLUS** series
- **AMBIT** series
- **ECL106** series
- **ICPLUS** series (100V version)

Suggested remote control accessories

- **WPm** series wall panels

AMPLIFIERS

MPA4-80R, MPA6-80R, MPA4-150R, MPA6-150R, MPA4-400R

WPmVOL

Line of multi-zone power amplifiers for high end installations

Key features

- 2 RU high, 19" installation multi-channel amplifier series
- Extended linear power supply
- Class D technology in 80W and 150W models and ECLER SPM patented in MPA4-400R model
- Individual input sensitivity controls with sealing possibility to avoid unwanted manipulation
- Signal presence (SP) and CLIP indicators for each channel
- Balanced inputs, XLR connectors (Euroblock in 150W models), Euroblock output connectors
- Stack outputs on all models
- Input channels link switch for superior versatility
- Independent VCA (EUROBLOCK) volume remote control port for each input channel, ready for external 0-10 V signal, compatible with WPm series wall panels
- Noiseless convection cooling (80 and 150 W models)
- Dual Slope Controlled Fan system (MPA4-400R)
- Totally protected against shorting, DC at the outputs and overheating
- Integrated internal 3rd order Butterworth HI-pass and LO-pass x-over (MPA4-150R, MPA6-150R, MPA4-400R) for bi-amped applications
- 2 RU high
- Three year warranty

Accessories

- **DLA600**: dual channel 100V adaptor for MPA4-150R, MPA6-150R and MPA4-400R
- **DLA4-80, DLA6-80:** 4/6 channel 100V adaptor for MPA4-80R and MPA6-80R
- **WPm series** wall panels

Applications

The reliable multi-channel solution for all applications requiring multi-zone audio distribution

- Public Address
- Theme parks
- Clubs
- Theme restaurants
- Multi-purpose halls
- Boardrooms and conference halls
- Franchise retail shops

4-80R, 6-80R and 4-400R back panel connectors and switches style

4-150R and 6-150R back panel connectors and switches style

Technical Characteristics

		MPA4-80R	MPA6-80R	MPA4-150R	MPA6-150R	MPA4-400R
POWER 20Hz-20kHz 1%THD	1 Channel @ 4Ω WRMS	80 WRMS	85 WRMS	182 WRMS	200 WRMS	410 WRMS
	1 Channel @ 8Ω WRMS	50 WRMS	52 WRMS	116 WRMS	115 WRMS	230 WRMS
	All Channels @ 4Ω WRMS	55 WRMS	58 WRMS	146 WRMS	123 WRMS	305 WRMS
	All Channels @ 8Ω WRMS	40 WRMS	48 WRMS	99 WRMS	85 WMRS	200 WRMS
	1 Bridged Channel @ 8Ω	117 WRMS	123 WRMS	370 WRMS	350 WMRS	610 WRMS
	All Bridged Channels @ 8Ω			290 WRMS	235 WRMS	
	Frequency response (-1dB)	20Hz - 30Hz		15Hz- 27kHz	15Hz- 35kHz	7Hz - 50kHz
	Filter (Hi-lo) 3rd order Butterworth	-		160Hz		
	THD+Noise*@1kHz Full Pwr.	‹0.02%		‹0.05%		
	Intermodulation distortion* 50Hz & 7kHz, 4:1	‹0.02%		‹0.06%		‹0.08%
	TIM 100 *	‹0.05%		‹0.04%		‹0.03%
	S+N/N 20Hz-20kHz*@1W/4Ω	›90dB		›85dB		
	CMRR*	-		›55dB		-

		MPA4-80R	MPA6-80R	MPA4-150R	MPA6-150R	MPA4-400R
Damping factor 1kHz @ 8Ω		›160		›280	›300	
Slew Rate		±10V/µs		±18V/µs		±50V/µs
Channel crosstalk @ 1kHz*		›60dB		›55dB		›70dB
Input Sensitivity / Impedance		0dBV/›20kΩ				
Anticlip		-		2% THD		1 & 5% THD
Mains Voltage		See characteristics in the back of the unit.				
Power consumption	pink noise, 1/8 power@ 4 Ω	270VA	415VA	159VA	233VA	650VA
	pink noise, 1/3 power@ 4 Ω	405VA	615VA	340VA	510VA	1200VA
Dimensions (mm)		482.6x88x373		482.6x88x280	482.6x88x373	482.6x88x408
Weight		8.5kg.	10.3kg.	9.3kg	10.8kg	19.8kg.

* VCA OFF

POWERED DIGITAL AUDIO MANAGERS

NXA4-80, NXA4-200, NXA 4-400, NXA 4-700, NXA6-80, NXA6-200

NXA is the name of a new series of "all-in-one" digital audio devices: a multichannel self-powered digital manager that stays halfway between the former NZA networkable amplifiers and a digital matrix. In some projects a remotely managed digital amplifier is necessary, but not enough to fulfill with the full list of requirements (sources mixing, input priority (talkover), FAULT monitoring, end user remote control, etc.). Adding a digital matrix to the list can take it out of budget. This is where the NXA series fits perfectly: an amplifier-processor digital hybrid device, a complete audio solution with various remote control options and a long list of smart features.

Key features

6 available models:

- NXA4-80: 4 x 80 W RMS @ 4 Ω
- NXA4-200: 4 x 200 W RMS @ 4 Ω
- NXA4-400: 4 x 420 W RMS @ 4Ω
- NXA4-700: 4 x 700 W RMS @ 4Ω / 4 x 1200 W RMS @ 2Ω
- NXA6-80: 6 x 80 W RMS @ 4 Ω
- NXA6-200: 6 x 200 W RMS @ 4 Ω
- 4/6 analogue inputs
- 4/6 powered output channels (can work in SINGLE, PARALLEL or BRIDGE modes)
- 4/6 GPI REMOTE control ports (compatible with 0-10VDC analogue control devices, like the WPmVOL and WPmVOL-SR wall panels). A REMOTE port can control one or several inputs volume, one or several outputs volume or a preset recall
- Class D amplifiers (eco friendly)
- Auto stand-by function (eco friendly)
- 100% silent, thanks to its fanless convection cooling system
- First-class digital audio codecs, providing excellent signal to noise ratio figures
- Ethernet interface, compatible with EclerNet Manager platform and UCP remote control system (webserver-webclient system)
- TP-NET third-party remote control, via Ethernet and RS-232 interfaces (compatible with CRESTRON®, AMX®, RTI®, VITY®, etc.)

Technical Characteristics	NXA4-80	NXA6-80	NXA4-200	NXA6-200	NXA4-400	NXA4-700
POWER 20Hz-20kHz 1% THD						
1 Channel @ 2Ω (RMS)						1220 W
1 Channel @ 4Ω (RMS)	85 W	84 W	202W	218 W	426 W	730 W
1 Channel @ 8Ω (RMS)	51 W	49 W	121 W	126 W	230 W	406 W
All Channels @ 4Ω (RMS)	66 W	65 W	168 W	163 W	330 W	530 W
All Channels @ 8Ω (RMS)	43 W	42 W	107 W	105 W	205 W	327 W
1 Bridge channel @ 8Ω (RMS)	160 W	158 W	383 W	399 W	760 W	1180 W
1 Bridge channel @ 4Ω (RMS)						2070 W
Overall Voltage Gain	+26 / +32 dB					
Frequency response (-1dB, -3dB)	10Hz – 25kHz					
THD + Noise @ 1kHz Full power	‹0.05%		‹0.08%			
Noise Floor (FFT) 20Hz – 20KHz	‹100dB (110dB typ.)					
Damping factor 1kHz @ 8Ω	›150	›140	›400	›350	›600	›200
Channel Crosstalk @ 1kHz	›75dB					
Input connectors	Terminal block (Symmetrical)					
Input CMRR/ref. Max. PWR	›50dB					

	NXA4-80	NXA6-80	NXA4-200	NXA6-200	NXA4-400	NXA4-700
Signal present indicator	Lit at –40dBV					
Output connectors	Terminal block					
Anticlip limiter	Soft / Mid / Hard					
Volume remote control	(0-10VDC) (0.1A max.) 0V = no attenuation / +10V = full attenuation					
Remote control connectors	Terminal block					
Mains	Depending on your country. See characteristics in the back of the unit.					
Power consumption						
(pink noise, 1/8 power @ 4ohm)	107 VA	144 VA	225 VA	312 VA	431VA	729VA
(pink noise, 1/3 power @ 4ohm)	208 VA	291 VA	489 VA	685 VA	948VA	160VA
Stand-by mains consumption	‹3W					
Panel Dimensions	482.6x88mm					
Depth (Handle excluded)	373mm	373mm	373mm	373mm	373mm	423mm
Weight	9.2kg	10.2kg	12.6kg	14.1kg	16.0kg	19.0kg

Key features (continued)

- Front panel POWER and/or LEVEL knobs can be disabled to avoid unwanted manipulation
- Front panel knobs can control one or several inputs volume, or one or several outputs volume
- Device's programmable health self-test mode function, with FAULT RELAY (it allows to detect a device's failure and then activate an external redundancy system)
- Integrated anti-clip system
- 2 units rack height
- Integrated DSP processor. Main features:
  - Each channel has an inputs' mixer that allows to get a customized and independent (per channel) mix of all the available input signals
  - VOLUME, MUTE, SOLO, PHASE INVERSION, MAX. VOL limit and MIN.VOL limit controls, per channel
  - LP and HP Crossover filters, up to 4th order, per channel
  - 8 parametric EQ filters bank, per channel
  - Compressor, with THRESHOLD, COMP. RATIO, ATTACK, RELEASE, KNEE and MAKE-UP GAIN parameters, per channel
  - Delay, up 1.000 milliseconds, per channel
  - DUCKER function: one input can be configured as the highest priority signal, being able to override the audio contents in the desired channels in the unit, when it overpasses the detection threshold. This function is especially useful in evacuation / emergency systems, where a message must be automatically detected and played instead of the program audio
  - 5 preset memories available

Applications

- Live sound (WiFi management is possible from a PC)
- Centralized, distributed or hybrid fixed installation
- Integration in installation global control systems
- Big Public Address zoned systems
- Installations requiring remote supervision, diagnostic and adjustment via Internet

WPmSCREEN digital controller, compatible with all the EclerNet products

NXA SERIES

DIGITAL		
Processing:	A/D & D/A	24 bit, 48kHz. 115dB AKM Codec
	DSP	32/64 bits
	Latency	2ms
	Analog Input headroom:	+18 dBV = +21dBu
	Digital Input attenuator:	Stepless from −∞ to +0dB
	Input Impedance:	Balanced, 22kΩ
	Maximum Delay:	1s (343.4m) for each channel
	Delay resolution:	20.8µs (6mm)
Compressor / Limiter:	Threshold	from -36dBV to +18dBV
	Ratio	›50dB
	Attack time	Auto or from 0.1ms to 500ms.
	Release time	Auto or from 1ms to 5s.
Output peak voltage limiter:	Peak voltage upon model (auto settings)	From 10Vpk to 70Vpk

NXA SERIES

ligh & Low pass Crossover filters	Butterworth in 6/12/18/24dB/oct. Bessel in 12/18/24dB/oct Linkwitz-Riley in 12/24dB/oct.
'arametric Eq. types (8 max. per output)	Bypass / On-Off all channels Param. Eq. 20Hz-20kHz; -60/+12dB; Q from =.3 to 200 Low & High Shelf 6/12 dB/oct Low & High Pass 6/12 dB/oct. All-Pass 1/2 order
Built In signal generator	Sine (20Hz to 20kHz) Polarity(10/20Hz to 10/20kHz) White Pink
Signal Mute	Yes
Signal Polarity Invert	Yes
Connectivity:	Ethernet Base-Tx 10/100Mb, Auto X-Over, Cat5 RS232 57600(fixed)-8-N-1-N

NXA SERIES

SOFTWARE		
EclerNet Software	Realtime full GUI of all functions and controls thru Ethernet with interactive graphical display Grouping mode channels or devices Automated report generation Remote power on with programmable delay Up to 256 devices on same net Autodiscovery devices feature Routing capability through NAT gateways Real time metering at input/output (DSP) Device "Finder" feature Save & Recall setup and preset functions Firmware update capability thru Ethernet Password protection	
	Default Network configuration	IP: 192.168.0.100 Mask: 255.255.255.0 Gate: 192.168.0.1 UDP Port: 2210
Operating System:	XP ®Prof. (SP3); Vista® (SP1); W7® (SP1).	
Minimum EclerNet System Requirements:	Pentium IV ® 2GHz 500MB RAM 100MB HDD free space 1024x768 pixels & 16bits colour display 10/100/1000 Ethernet Network card	

NXA4 BC

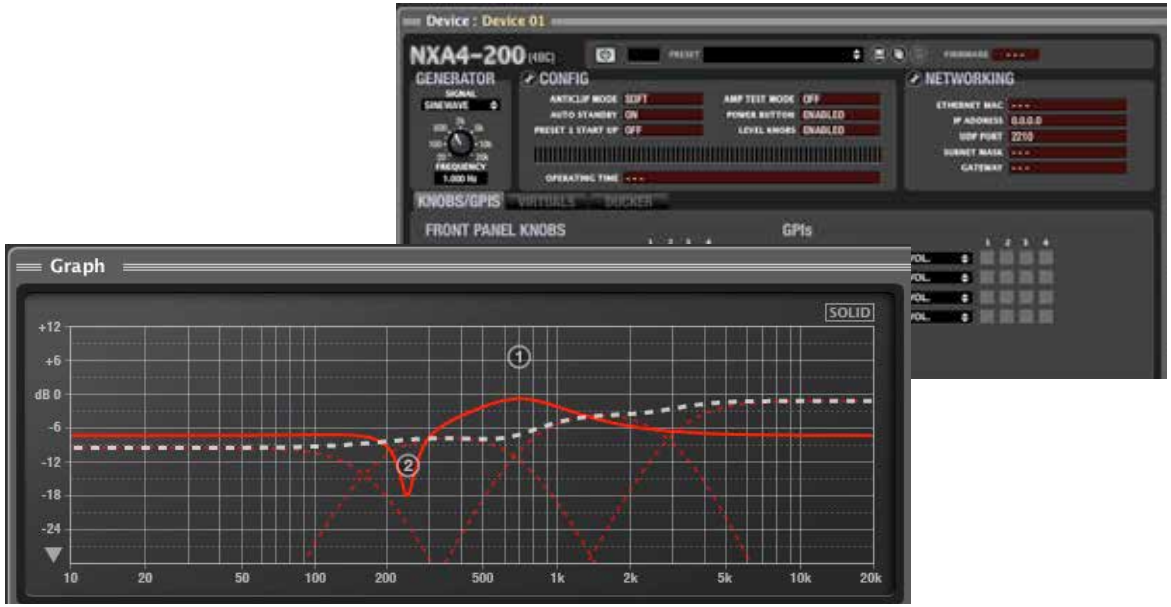

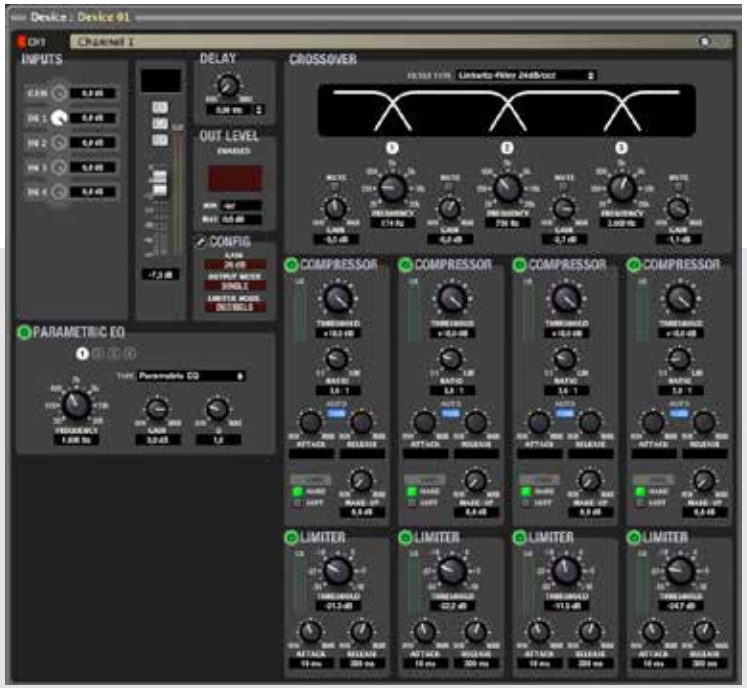

NXA 4BC (4 band compressor/limiter) is a dedicated software and firmware version for the NXA series, tailored for applications where a strict SPL (Sound Pressure Level) limit must be guaranteed.
This is a requirement which is more and more frequent today, sometimes due to official regulations in certain territories, and some others just due to environmental or neighbourhood needs, and in both cases with the goal of assuring that a certain maximum audio volume is never being surpassed.
This NXA skin allows installers adjust SPL limits along the whole audio frequency spectrum, being able to split the compressor / limiter function into 4 different and independent frequency bands, each one with its dedicated setup.
Once adjusted, the NXA4BC can be locked and protected, becoming an audio "black box" that performs all the sound processing required in a venue, as well as the power amplification and the customized user control interface options, finally adding the required limiting function to become a real tamper-proof system.

Main characteristics

- Compatible with any NXA hardware unit model (4 or 6 channels)
- Each output channel includes 4 independent frequency bands processing, including a dedicated compressor and limiter (just for channels 1 to 4 in the 6-channel models: channels 5 and 6 may get their processing from any of the 1 to 4 ones)
- Common features to the standard NXA series:
  - Programmable front knobs and REMOTE ports functions
  - DUCKER module (priority message, etc.)
  - Matrix mix, main VOL & MUTE, POLARITY and SOLO controls, per channel
  - Ethernet & RS-232 interfaces
  - Compatible with EclerNet manager and TP-NET protocol /for third-party external control systems)
  - UCP remote control ready, compatible with WPmSCREEN and third-party clients
  - Self-integrity check system

NOTE

NXA 4BC software version requires a paid license for each standard NXA hardware unit that may get the upgrade. Please, contact your Ecler distributor for more information

The new LPA series brings all the classic, well-known reliability and amplification quality of Ecler to a new light-weight format that is versatile and affordable.

When activated, the built-in crossover allows you to send the low frequency band to channel 1 and the high frequency band to channel 2 (cut-off point at 150 Hz) internally, making it simple and cost effective to create two-channel configurations without any external processing.

Key features

- Ultra light technology (5.6, 6.8 and 9.2 kg: LPA6000, 10000 and 16000)
- Built-in crossover filter
- Efficient progressive ventilation system with a flow that adapts to the internal temperature of the amplifier. The air comes in from the back and is pushed out to the front
- Rotary input attenuation controls that are easily accessible on the front panel
- LED indicators: power-on and standby (POWER ON, STD BY), signal presence (SIGNAL), clipping (CLIP), operating mode (STEREO, BRIDGE), crossover activated (XOVER) and protections activated (PROTECT)
- Efficient short-circuit, overheat and DC signal protection system to prevent damage to the amplifier and/or the loudspeakers connected to it
- Permanently activated built-in anti-clip circuit
- Operating mode selector: STEREO, PARALLEL and BRIDGE
- Balanced inputs via XLR3 connectors and 6.35 mm stereo jack. Unbalanced inputs via RCA connectors.
- Amplified outputs with terminal-type connectors and Speakon® connectors

LPA power fast guide		LPA6000	LPA10000	LPA16000
POWER 20-20kHz 1% THD (Both channels driven)	4Ω Stereo	320WRMS	500WRMS	760 WRMS
	8Ω Stereo	210WRMS	330 WRMS	450 WRMS
	8Ω Bridged	640WRMS	1000 WRMS	1520 WRMS

Technical Characteristics		LPA6000	LPA10000	LPA16000
POWER 20-20kHz 1% THD	4Ω Stereo	320WRMS	500WRMS	760 WRMS
	8Ω Stereo	210WRMS	330 WRMS	450 WRMS
	8Ω Bridged	640WRMS	1000 WRMS	1520 WRMS
Frequency response (-1dB/-3dB)		10Hz/58kHz	10Hz/58kHz	10Hz/52kHZ
Crossover filter (-3dB) (CH1=LOW, CH2=HIGH)		150Hz/18dB oct.		
THD+Noise @ 1kHz Full Pwr.		<0.1%	<0.05%	<0.1%
S+N/N 20Hz-20kHz @ 1W/4Ω		>85dB		
Damping Factor 1kHz @ 8©		>270		
Slew Rate		±37V/µs	±43V/µs	±30V/µs
Input connectors		XLR3 & 1/4" Jack balanced & RCA		
Input Sensitivity / Impedance		26/32dB/20k© Bal. 10kΩ Unbal		
Signal present indicator		-40dB		
Output connectors		Speakon & Binding Posts		
Mains		230V 50/60Hz		
Power (pink noise, 1/8 power @ 4ohm)		670VA	1040VA	600VA
consumption (pink noise, 1/3 power @ 4ohm)		1000VA	1580VA	1840VA
Dimensions (mm)		482.6x304x88	482.6x360x88	482.6x360x88
Weight		5.62kg	6.85kg	9.2kg

Applications

- Touring (small live)
- Mobile applications
- Permanent installation

AMPLIFIERS

GPA 2-400, GPA 2-800

GPA is a series of stereo amplifiers that become a perfect and affordable option in many audio projects.
The GPA2-400 is ready to drive 2,66Ω loudspeaker loads (3 x 8Ω loudspeaker in parallel), per channel and the GPA2-800 is ready to drive 2Ω loudspeaker loads (4 x 8Ω loudspeaker in parallel), per channel.
A very high efficiency and an auto standby function provide this amplifiers with a true green profile.

Key features

- 2 models:
  - GPA2-400: 2 x 360 W RMS output @ 4Ω
  - GPA2-800: 2 x 720 W RMS output @ 4Ω
- 2 mono balanced inputs (XLR and Euroblock terminals)
- Euroblock output and speakon connectors
- 2 REMOTE volume ports (0-10VDC), compatible with WPm series wall panels
- High efficiency, auto standby function and convection cooling (fanless, 100% silent)
- BRIDGE mode ready
- Thermal protection
- Overload protection
- Anti-clip system
- Volum control knobs on front panel with protection cap, against undesired manipulation

Applications

- Clubs
- Theme restaurants
- Discos
- Leisure centres
- Cinemas and theatre
- Educational centres
- Boardrooms and conference halls
- Sports centres
- Mobile outdoor applications

Technical Characteristics

		GPA2-400	GPA2-800
POWER 20-20kHz 1% THD	1 Channel @ 4Ω	390 WRMS	640 WRMS
	1 Channel @ 8Ω	225 WRMS	347 WRMS
	All Channels @ 4Ω	322 WRMS	575 WRMS
	1 Channel @ 2.666Ω	506 WRMS	880WRMS
	1 Channel @ 2Ω		1000WRMS
	2 Bridged channels @ 8Ω	650 WRMS	1150 WRMS
Frequency response (-1dB, -3dB)		20Hz - 55kHz	20Hz - 55kHz
Filter (High-Pass) 3rd order Butterworth		50Hz	50Hz
THD+Noise @ 1kHz Full Pwr.		‹0.05%	‹0.05%
Intermodulation distortion 50Hz & 7kHz, 4:1		‹0.06%	‹0.06%
TIM 100		‹0.04%	‹0.04%
S+N/N 20Hz - 20kHz @ 1W/4Ω		›85dB	›85dB
CMRR		›55dB	›55dB
Damping factor 1kHz @ 8Ω		›60dB@1kHz	›200
Signal present indicator		›360	TBA

	GPA2-400	GPA2-800
Channel crosstalk @ 1kHz	‹55dB	›55dB
Input sensitivity / Impedance	0dBV/›20kΩ	0dBV/›20kΩ
Anticlip @ 2dBV input	‹5% THD	‹5% THD
Mains voltage	See characteristics in the back of the unit.	
Power consumption		
(pink noise, 1/8 power @ 4ohm)	129W / 196VA	252W / 383VA
(pink noise, 1/3 power @ 4ohm)	308W	613W
(idle)	26W	47W
(STBY)	12W	16W
Efficiency (typical)	85%	87%
STBY time	90s	90s
Dimensions (Handle excluded)	482.6x88x373mm	482.6x88x373mm
Weight	10.8kg	13.5kg

Accessories

- WPm series wall panels

DPA1000, DPA 1400, DPA 2000, DPA 4000T

AMPLIFIERS

Line of stereo power amplifiers including SPM proprietary technology and optional in-bay ALMAcard DSP module, very suitable for the high end installation

Key features

- ECLER patented SPM amplifying technology
- All the power all the time: permanent sound quality, no matter how long the unit is working (DPA4000T)
- Drive down to 2Ω loads
- A2SP Analog Autogain Signal Processor: input signal management in stress work conditions (DPA4000T)
- Balanced inputs (XLR), balanced stack outputs (JACK , except the 4000T, XLR), Speakon® output connectors
- Intelligent ANTICLIP system: always on. Limits Harmonic Distortion by monitoring the transient behaviour of the input signal
- Independent channel THERMAL protection with the front panel indicator
- PROTECT indicator when DC, when detected DC / LF input signals, or short-circuit loads
- SIGNAL PRESENT front panel indicator (-40dBV)
- CLIP indicator active for output signals 1.5dB below real clipping
- On-board 25 Hz switchable SUBSONIC filter
- Crowbar (relay-free) DC protection circuit
- Smart back-to-front cooling system
- ALMAcard DSP card compatible
- Tamper-proof front knobs plastic caps
- 2 RU high (3 RU for the DPA4000T)
- Three year warranty

ALMAcard

DPA and DPA-T Accessories

- **ALMAcard:** DSP card for extensive and comprehensive signal processing. PC remote controlled by EclerCOMM software application. Turns DPA amplifier into a complete audio solution

Technical Characteristics		DPA1000	DPA1400	DPA2000	DPA4000T
POWER	2Ω Stereo	682 WRMS	990 WRMS	1420 WRMS	2800 WRMS
20Hz-20kHz	4Ω Stereo	440 WRMS	635 WRMS	940 WRMS	1880 WRMS
1% THD	8Ω Stereo	275 WRMS	395 WRMS	550 WRMS	1110 WRMS
(Both channels driven)	8Ω Bridged	882 WRMS	1270 WRMS	1880 WRMS	3760 WRMS
Peak Power 2Ω/1kHz		1.5Kw	2Kw	2.95 Kw	6100 WRMS
Frequency response (-1dB)		7Hz-50kHz	7Hz-50kHz	6Hz-50kHz	6Hz-95kHz
High pass filter (-3dB)		25Hz/Butt/18dB/oct.			
THD + Noise @ 1kHz Full Power		‹0.03%	‹0.03%	‹0.07%	‹0.07%
Imd. dist. 50Hz & 7kHz 4:1		‹0.08%	‹0.08%	‹0.08%	‹0.08%
TIM 100		‹0.01%	‹0.01%	‹0.01%	‹0.04%
S+N/N 20Hz-20kHz@ 1Ω/4Ω		›85dB	›85dB	›85dB	›84dB
Damping factor 1kHz@8Ω		›300	›300	›300	›370
Slew Rate		±65V/µs	±75V/µs	±80V/µs	±135V/µs
Channel Crosstalk @ 1kHz		›75dB	›75dB	›75dB	›74dB

		DPA1000	DPA1400	DPA2000	DPA4000T
Input Connectors		XLR3 Balanced			
Input CMRR/ref. Max. PWR		›60dB@1kHz			›70dB@1kHz
Input sensitivity/impedance		0dBV / ›20kΩ			
Signal present indicator		-40dB			
Output connectors		Speakon®			
Clip indicators		-1.5dB real clip			
Anticlip limiter		Intelligent A2SP			
Mains		Depending on your country			
Power consumption (max. Out)		1250VA	1720VA	3115VA	6760VA
Dimensions	Panel	482.6 x 88mm		482.6x88mm	482.6x132.5mm
	Depth	420mm		470mm	532mm
Weight		16.6kg	19.3kg	22.7kg	34.1kg

DPA and DPA-T Applications:

- Clubs
- Theme restaurants
- Discos
- Leisure centres
- Cinemas and theatre
- Educational centres
- Boardrooms and conference centres
- Mobile outdoor applications

IN-CEILING / IN-WALL SPEAKERS

IC5, IC6, IC8, IN-CEILING RANGE

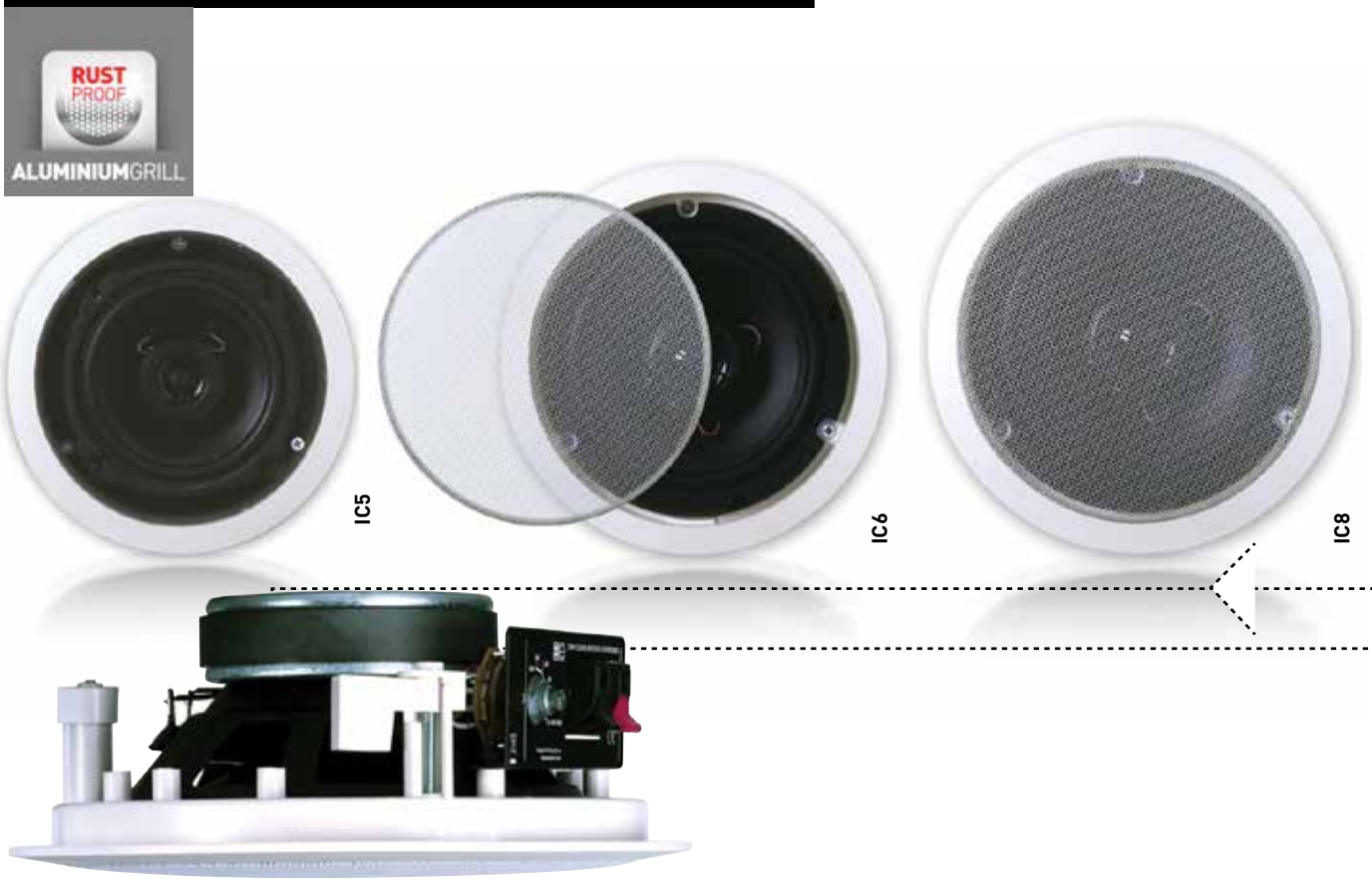

With their discreet design, this line of in-ceiling (IC) speakers is the perfect option for 100 V and low impedance sound solutions. Both series provide excellent sound quality thanks to their infinite baffle philosophy and a top-performance high frequency transducer.

Key features of the IC SERIES

- Two-way (except for the ICSB10) ABS speakers, infinite baffle configuration
- Built-in audio transformer for 100 V use
- Polypropylene woofer that resists heat and humidity
- Front grille may be removed for painting
- Clip-type input terminals
- Cutting and painting templates included
- Support system with 3 rotating tabs
- ICSB10: Included metallic accessories to reinforce installations in standard dropped ceilings

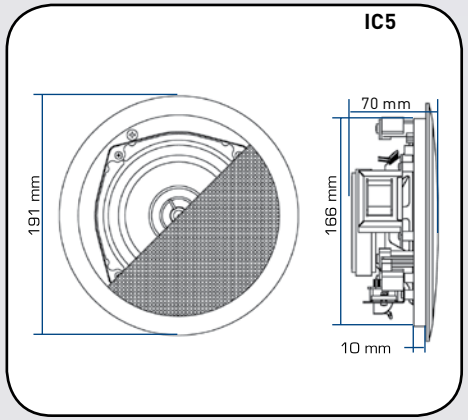

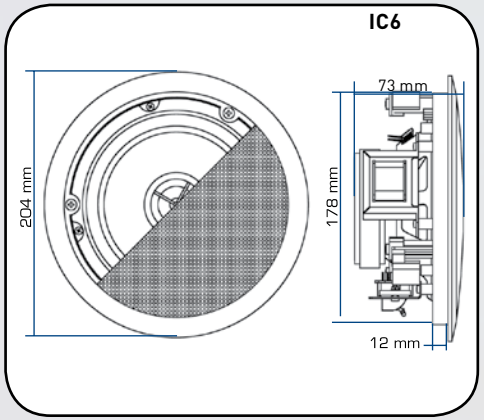

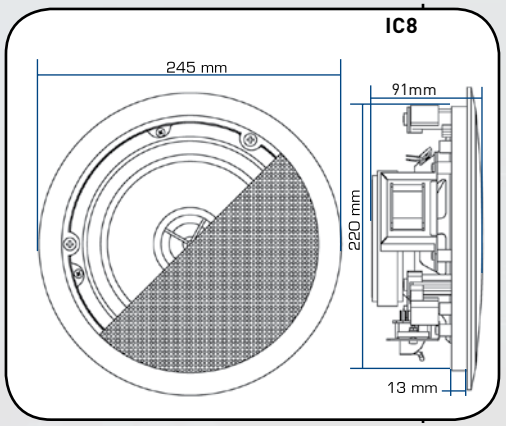

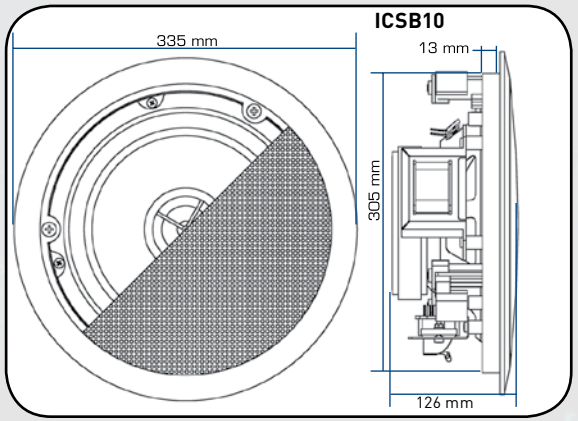

The ICSB10 is the perfect partner for consistent "invisible" bass amplification in installations involving ceiling speakers. Powerful, discreet and easy to install with a simple rotating tab system, this 10" sub-bass has a power of 100 W RMS and a very high acoustic performance. The front grille and frame can be painted to blend in better with the decoration environment. Each ICSB10 unit comes with a set of accessories that make it easy to install it in standard lowered ceiling grids, providing the installation all that much more solid and reliable.

ICSB10

Recommended amplification

- **DPA, GPA** and **LPA** series
- **HMA120** and **HMA180** self-powered mixers
- **CA** series compact RS-232 amplifiers
- **MPA-R** multi-channel amplifiers line (low impedance or high impedance with DLA adapters)
- **NXA** multi-channel amplifiers with built-in DSP and remote Ethernet management (low impedance)
- **HZA** multi-channel 100 V line amplifiers
- **HSA** series amplifiers (high impedance)

Technical Characteristics	IC5	IC6	IC8	ICSB10
Nominal low impedance	8Ω	8Ω	8Ω	8Ω
RMS power	25W	40W	60W	100W
Nominal high impedance	100V LINE	100V LINE	100V LINE	-
Power selector	1.5, 3, 6, 12W	2.5, 5, 7.5, 15W	5, 7.5, 15, 30W	7.5, 15, 30, 60W
Frequency response (-6dB)	80Hz - 20kHz	70Hz - 20kHz	55Hz - 20kHz	-
without LP filter(-10dB)	-	-	-	75Hz - 750Hz
LP passive filter cut off frequency	-	-	-	150Hz
Sensitivity 1W/1m (Filter off)	88dB	90dB	91dB	93dB
(Filter on, 80-200Hz)	-	-	-	91dB
External diameter	191mm	204mm	245mm	335mm
Internal diameter	166mm	178mm	220mm	305mm
Recommended cut out diameter	168mm	180mm	222mm	307mm
Dimensions of hole for installation	-	-	-	-
Required depth	70mm	73mm	91mm	126mm
Weight	1.2kg	1.52kg	2.3kg	3.4kg

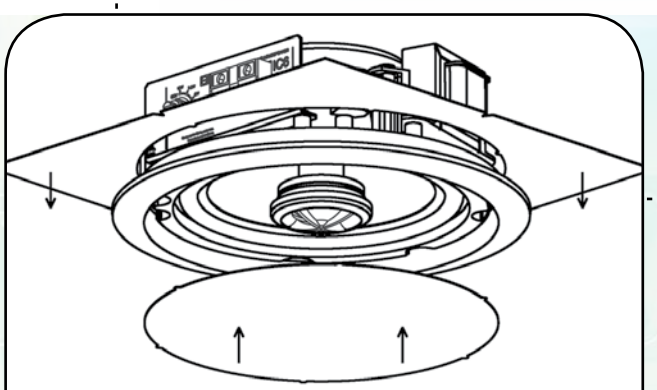

IC series are provided with cut-out and painting template for easy installation

IN-CEILING / IN-WALL SPEAKERS

IC6+ IC8+ IN-CEILING RANGE

IC6PLUSBCAN
optional back can

IC8PLUSBCAN
optional back can

The ICPLUS series of in-ceiling speakers from ECLER integrates a careful selection of components in a design that provides high quality sound and fast installation, using a minimum of tools.

For maximum flexibility and adaptability to multiple installation profiles, the series has a metal back can (included by default) and an optional 100V line transformer.

The ICPLUS series consists of 2 models: IC6+ and IC8+.

Key features

- High quality in-ceiling 2-way speaker
- Kevlar® woofer
- Silk dome (ACCW) tweeter, ± 15º tiltable
- NBR suspension
- Light construction in 4 mechanical bodies
- Fast installation system in 3 steps (frame-speaker-grill) using a minimum of tools and integrating an automatic safety pin
- Aluminium front grill
- Optional metal back can
- Optional 100 V line transformer
- Two available models:
  IC6PLUS: 6" woofer + 1" tweeter. 75 W RMS
  IC8PLUS: 8" woofer + 1".tweeter. 100 W RMS

Recommended amplification

- **MPA-R** multi-channel amplifiers line (low impedance or high impedance with DLA adapters)
- **NXA** multi-channel amplifiers with built-in DSP and remote Ethernet management (low impedance)
- **GPA, HMA, HSA,** and **CA** series

IC6PLUSTR and IC8PLUSTR optional 70/100V line transformers

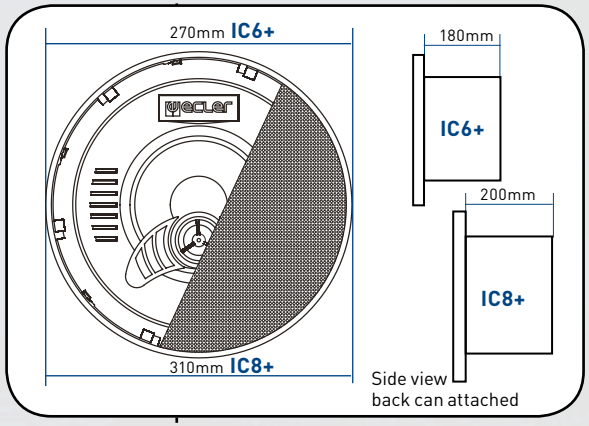

Technical Characteristics	IC6+	IC8+
Nominal impedance	8Ω	8Ω
RMS power	75W	100W
Frequency response (-6 dB)	65Hz - 22kHz	50Hz - 22kHz
Sensitivity 1W/1m	86dB	90dB
External diameter	270mm	310mm
Internal diameter	224.5mm	264.5mm
Recommended cut out diameter	227mm	267mm
Required depth, with back can	180mm	200mm
Weight	1.5 kg	2 kg

Applications

High quality speech and music playback in:

- Corporate and residential buildings
- Commercial premises
- Leisure centres
- Sound reinforcement in clubs, bars, etc.
- Health and sports centres
- Meeting and conference rooms
- 5.1 and 7.1 surround systems
- Auditoriums, museums

In ceiling high-efficiency affordable loudspeakers. Suitable for Public Address, BGM and other sound systems employing 100 V lines, where high sound pressure with low amplifier's power is a requirement. They include aluminium front grill and fast mounting system by means of their retractile clips.

Available in the standard (ECL106i) and fire rated (ECL106iFR) versions, compliant with the BS-5839-8 regulation.

ECL106I Key features

- One way, 6" transducer
- Nominal impedance: 8Ω
- Power: 6 W RMS
- Integrated 100 V line transformer
- 100 V line power taps: 0.75, 1.5, 3, 6 W
- Frequency response (±3 dB): 100 Hz - 18 kHz
- Max SPL: 101 dB
- 1 W / 1 m sensitivity: 93 dB
- External diameter: 200 mm
- Recommended cut out diameter: 185 mm
- Required depth: 70 mm
- Weight: 0.67 kg

ECL106IFR Key features

- Includes all the items required to comply with the BS 5839-8 to become a fire rated loudspeaker:
  -Ceramic connector
  -Thermal fuse
  -Fire-proof back can
- One way, 6" transducer
- Nominal impedance: 8Ω
- Power: 6 W RMS
- Integrated 100 V line transformer
- 100 V line power taps: 0.75, 1.5, 3, 6 W
- Frequency response (±3 dB): 100 Hz - 18 kHz
- Max SPL: 101 dB
- 1 W/1 m sensitivity: 93 dB
- External diameter: 200 mm
- Recommended cut out diameter: 185 mm
- Required depth: 90 mm
- Weight: 0.95 kg

ECL106IFR

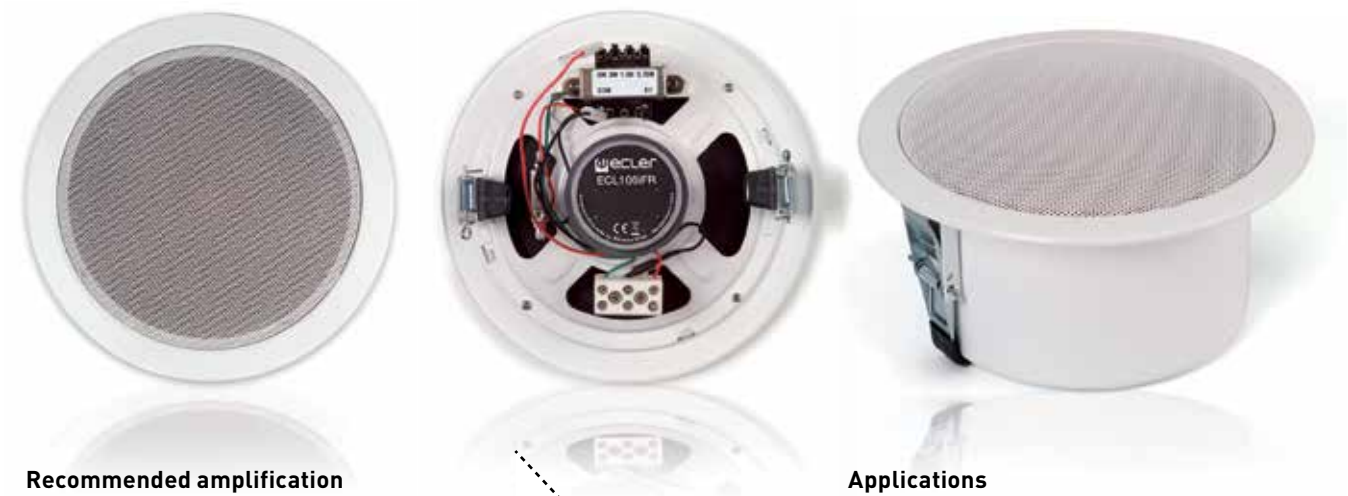

Recommended amplification

- **DPA, GPA** and **LPA** series
- **HMA120** and **HMA180** self-powered mixers
- **CA** series compact RS-232 amplifiers
- **MPA-R** multi-channel amplifiers line (low impedance or high impedance with DLA adapters)
- **NXA** multi-channel amplifiers with built-in DSP and remote Ethernet management (low impedance)
- **HZA** multi-channel 100 V line amplifiers
- **HSA** series amplifiers (high impedance)

Applications

- Industrial facilities
- Corporate, office and residential buildings
- Supermarkets, shops, retail stores
- Big public areas
- Transport stations and related facilities
- Health & sport centres

Technical Characteristics	ECL106i	ECL106iFR
Nominal low impedance	8Ω	8Ω
RMS power	6W	6W
Power selector (100V line)	0.75, 1.5, 3, 6W	0.75, 1.5, 3, 6W
Frequency response (±3 dB)	100Hz - 18kHz	100Hz - 18kHz
Maximum SPL	101dB	101dB
Sensitivity 1W/1m	93dB	93dB
External ø	200mm	200mm
Recommended cut out ø	185mm	185mm
Required depth	70mm	90mm
Weight	0.67 kg	0.95 kg

LOUDSPEAKER CABINETS

AMBIT103, AMBIT106

AMBIT range is more than just a line of acoustic cabinets for sound reinforcement.
AMBIT is the outcome of a study on the present and immediate future needs with respect to background and foreground pro audio applications.
Conceived to integrate into any décor and to provide superb audio quality under a versatile basis.

Key features

- ABS architectural reinforced cabinets range
- Built–in audio transformer for 100V applications
- 8 ohms /100V operation selector
- All models include on-wall hardware, safety sling, screws and wrench for fast installation
- Available in black and white colours to match any décor
- Spring loaded input terminals
- IP rated for weatherproof installations
- Anti UV cabinet avoids colour degradation in case of direct sunlight exposition

Recommended amplification

- **DPA, GPA** and **LPA** series
- **HMA120** and **HMA180** self-powered mixers
- **CA** series compact RS-232 amplifiers
- **MPA-R** multi-channel amplifiers line (low impedance or high impedance with DLA adapters)
- **NXA** multi-channel amplifiers with built-in DSP and remote Ethernet management (low impedance)
- **HZA** multi-channel 100 V line amplifiers
- **HSA** series amplifiers (high impedance)

Applications

- Shopping centres
- Retail shops
- PA distributed sound systems
- Clubs, Cafes, Bars foreground/background reinforcement
- Tourist temporary outdoor installations

AMBIT103

AMBIT103

Ultra compact 2 way coaxial loudspeaker cabinet for non obtrusive applications. Specially suitable for background reinforcement in thematic restaurants, cafés, retail premises and licensed venues.

- 2 way full range ultra compact loudspeaker cabinet
- Built-in audio transformer for 100V applications
- 25 W RMS/8 ohms
- Power selector (100V): 15,7.5,5,2.5 W
- 3.5" polypropylene woofer ensure stability against heat and humidity
- 13mm soft dome coaxial tweeter
- 13 mm soft dome coaxial tweeter
- Included bracket for on-wall installation
- IP54 rated
- Efficiency 87 dB SPL 1W/1m
- Freq response (-3dB) 150Hz – 20kHz
- Dimensions (mm) 120x120x117
- 1.275 Kg

Accessories AMBIT103

- **MP103AMB2, MP103AMB4** for 2 or 4 units cluster configuration.
- Available in black. See dedicated product pages for further information.

Technical Characteristics	AMBIT103	AMBIT106
Ways	2	2
Nominal low impedance	8Ω	8Ω
Max RMS power	25W	50W
Program power	50W	100W
Nominal high impedance	100V LINE	100V LINE
Power selector	2.5 / 5 / 7.5 / 15W	5 / 7.5 / 15 / 30W
Efficiency SPL 1W 1m	87 dB	93 dB
Frequency response at -3dB @ 8Ω	150Hz ÷ 20kHz	110Hz ÷ 20kHz
Dimensions WxHxD (without accessories)	120x120x117mm	210x210x160mm
Weight	1.275 kg	2.75 kg

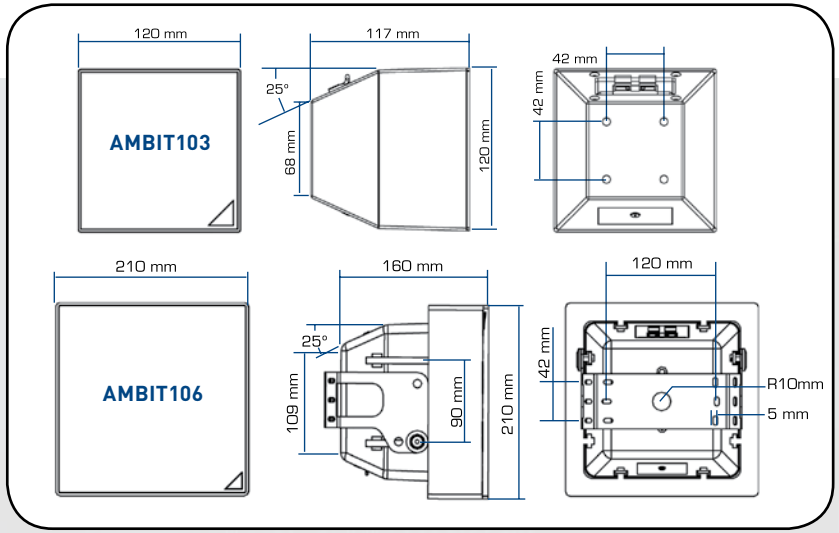

AMBIT106

Compact 2 way coaxial loudspeaker cabinet for non obtrusive applications. Specially suitable for background or foreground reinforcement in thematic restaurants, cafés, retail premises and licensed venues.

- 2 way full range compact loudspeaker cabinet
- Built-in audio transformer for 100V applications
- 50 W RMS/8 ohms
- Power selector (100V): 30,15,7.5,2.5 W
- 6.5" polypropylene woofer ensure stability against heat and humidity
- 25 mm soft dome coaxial tweeter
- Included U-bracket for on-wall installation
- IP54 rated
- Efficiency 93 dB SPL 1W/1m
- Freq response (-3dB) 110Hz – 20kHz
- Dimensions (mm) 210x210x160
- 2.75 Kg

AMBIT106

Accessories AMBIT106

- **MP106AMB2/WH, MP106AMB3/WH, MP106AMB4/WH**: for 2,3 or 4 units cluster configuration. Available in black and white colours
- **SR6/WH**: on wall bracket MP106AMB2 cluster. Available in black and white colours. See dedicated product pages for further information.

AMBIT ACCESSORIES

All measurements in mm.

MP103AMB2

Hardware for 2 AMBIT103.
Available in black

MP106AMB2/WH

Hardware for 2 AMBIT106.
Available in black and white

MP106AMB3/WH

Hardware for 3/6 AMBIT106.
Available in black and white

Mechanical Characteristics	SR6
Length	161mm
Max. width	100mm
Max. height	100mm
Pan	170°
Tilt	180°
Wall hole diameter	6mm
Distance between holes for speaker attachment	60 mm

MP103AMB4

Hardware for 4 AMBIT103.
Available in black

MP106AMB4/WH

Hardware for 4 AMBIT106.
Available in black and white

SR6 ON WALL

Hardware for AMBIT108 and MP106AMB2.
Available in black and white

The AUDEO loudspeaker series strikes the perfect balance between the intelligibility and sound reproduction quality requirements currently demanded in the professional audio installation and ever increasing demands with respect to aesthetics, design and integration into all types of architectural environments.

AUDEO has a balanced, innovative design, resulting from the collaboration between Ecler and the prestigious group Giugiaro Design during the conceptual and the external design phases of the speakers. This factor, together with its high quality sound reproduction, make this series the ideal solution for use in numerous sound projects: corporate and residential buildings, commercial premises, leisure centres, health centres, conference and meeting rooms, auditoriums, museums, etc.

This versatile series, which comes in three sizes (AUDEO 103, 106 and 108), and in black or white, is completed by its wall/ceiling supports which allow the cabling to be concealed and make it possible to install the speakers at low (8 ohms) or high impedance operation (100 V line).

In addition to the included wall bracket, the 103 and 106 models can use the DSTANDAUDEO desktop stand. If you need to mount the AUDEO speakers on a microphone stand, then the MSTANDAUDEO is the right accessory to use.
For a subwoofer reinforcement of the AUDEO series speakers, try the AUDEO SB110P self-powered subwoofer cabinet.

Key features

- Full range, 2-way acoustic boxes.
- Made of reinforced ABS
- Available in black or white
- 8 ohms / 100 V line operating switch
- Accessories for wall-mounting included
- IP 54 class for installing outdoors
- Protective grille at the front with anti-rust treatment

AUDEO103

AUDEO103

- 25 W RMS - 8 ohms
- Efficiency: 90 dB SPL 1 W / 1 m
- 8 ohm / 100 V (2.5, 5, 7.5 or 15 W) mode switch
- 3.5" woofer and 13 mm Tweeter
- Frequency response (-10 dB):
- 110 Hz to 20 kHz
- Dimensions: 132 x 134 x 110 mm
- Weight: 1.45 kg

Recommended amplification

- **DPA, GPA** and **LPA** series
- **HMA120** and **HMA180** self-powered mixers
- **CA** series compact RS-232 amplifiers
- **MPA-R** multi-channel amplifiers line (low impedance or high impedance with DLA adapters)
- **NXA** multi-channel amplifiers with built-in DSP and remote Ethernet management (low impedance)
- **HZA** multi-channel 100 V line amplifiers
- **HSA** series amplifiers (high impedance)

Applications:

- Corporate and residential buildings
- Commercial premises
- Leisure centres
- Sound reinforcement in clubs, bars, etc.
- Health and sports centres
- Meeting and conference rooms
- Auditoriums, museums

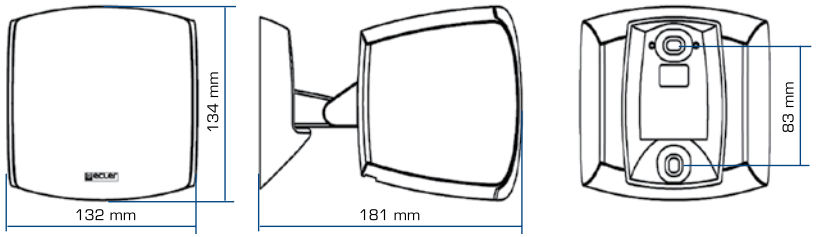

AUDEO106

- 50 W RMS - 8 ohms
- Efficiency: 92,5 dB SPL 1 W / 1 m
- 8 ohm / 100 V (5, 7,5, 15 or 30 W) mode switch
- 6.5" woofer and 25 mm Tweeter
- Frequency response (-10 dB): 90 Hz to 20 kHz
- Dimensions: 242 x 242 x 163 mm
- Weight: 2.3 kg

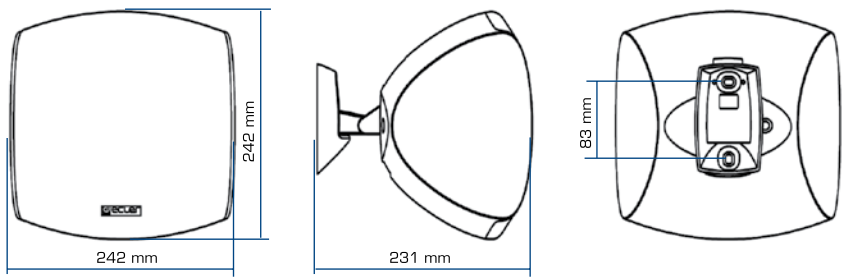

LOUDSPEAKER CABINETS

AUDEO108, STANDAUDEO, MSTANDAUDEO

AUDEO108

- 100 W RMS - 8 ohms
- Efficiency: 94,5 dB SPL 1 W / 1 m
- 8 ohm / 100 V (7,5, 15, 30 o 60 W) mode switch
- 8" Kevlar woofer and 1" ACCW silk dome tweeter
- Frequency response (-10 dB): 65 Hz to 22 kHz
- Aluminium made wall bracket
- Dimensions: 300 x 310 x 225 mm
- Weight:: 3.75 kg

DSTANDAUDEO

DSTANDAUDEO

Desktop stand for the AUDEO103 and AUDEO106 models

MSTANDAUDEO

Microphone stand adapter for the AUDEO series speakers

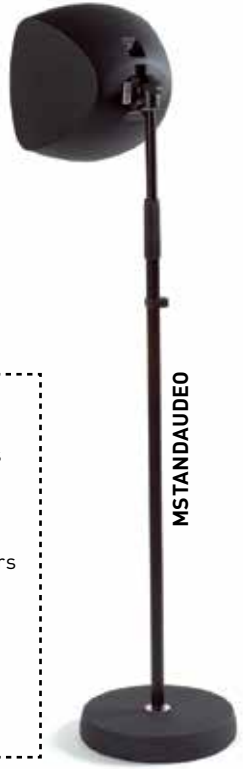

Technical Characteristics	AUDEO103	AUDEO106	AUDEO108
Ways	2	2	2
Nominal low impedance	8Ω	8Ω	8Ω
Max RMS power	25W	50W	100W
Program power	50W	100W	200W
Nominal high impedance	100V LINE	100V LINE	100V LINE
Power selector	2.5 / 5 / 7.5 / 15W	5 / 7.5 / 15 / 30W	7.5 / 15 / 30 / 60W
Efficiency SPL 1W 1m	90 dB	92.5 dB	94.5 dB
Frequency response at -3dB @ 8Ω	110Hz ÷ 20kHz	90Hz ÷ 20kHz	65Hz ÷ 22kHz
Dimensions WxHxD (without accessories)	132x134x110mm	242x242x163mm	300x310x223mm
Weight	1.45 kg	2.3 kg	3.75 kg

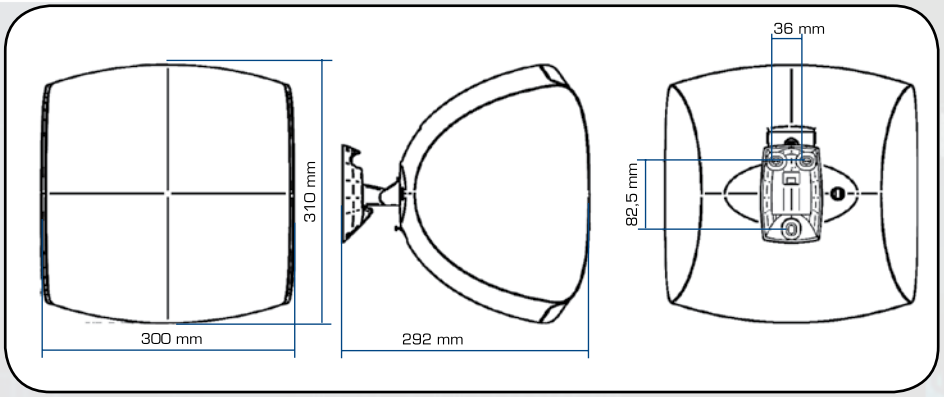

AUDEOSB110

The AUDEO SB110 is a passive subwoofer reinforcement unit for the AUDEO series loudspeakers.

Key features

- 10" driver
- 150 W RMS maximum power
- Euroblock / clip double INPUT / STACK terminals
- Internal LPF with 2 frequency settings

AUDEOSB110P

The AUDEO SB110P is the self-powered subwoofer reinforcement unit of the AUDEO series. With a discreet design that enables its use in any environment, this 10", 150 W RMS model, is the ideal partner for the AUDEOs in those music applications where extended low-end response is required.

Key features

- 10" driver
- 150 W RMS integrated amplifier
- RCA inputs with mono conversion
- RCA stack outputs (link to other SB110P units, AUDEO speakers, etc.)
- PHASE and volume controls
- Internal 150Hz/18dB oct. LPF

AUDEOSB10P21

Complete 2.1 audio unit, including a self-powered 10" subwoofer loudspeaker and an integrated stereo amplifier for the connection of stereo satellite loudspeaker lines.

Key features

- 10" driver and integrated amplifier for the subwoofer way
- Integrated stereo amplifier for satellite loudspeakers. Admits 2 Ω loads! (from 1 up to 4 Ecler loudspeakers in parallel at each amplifier output)
- Global programme power: 450W (150 W for subwoofer way / 2 x 150 W for stereo satellite loudspeakers)
- RCA and Euroblock INPUT/STACK terminals
- LPF, POLARITY, MASTER VOL and SUB VOL controls
- REMOTE VOL control port (0-10 VDC)

Technical Characteristics		AUDEOSB110P
Driver		1x10* Bass
Power output (RMS)		150W
Maximum SPL (dB@1m)		112dB
Inputs sensitivity nom/impedance		0dBV 1V › 1kΩ
Connector type		RCA
Frequency response (-10dB)		40Hz
Crossover filter (-3dB)		150Hz/18dB oct.
Mains		AC 115V/230V 50-60Hz
Power consumption	(pink noise, 1/8 power)	107VA
	(pink noise, 1/3 power)	152VA
	(max.power)	237VA
Dimension (WxDxH mm/Pcs.)		310x505x420mm
Weight		16.75kg

SELF-POWERED AUDEO KIT

AUDEO106P kit

The AUDEO106P self-powered kit is the embodiment of the successful and highly reputed AUDEO series in a user-friendly and cost-effective formula that can become the perfect solution in a massive number of multimedia applications. A professional and compact loudspeaker stereo kit with a fantastic performance and a unique design that will easily fit in education classrooms, corporate meeting rooms, retail stores, etc.

Key features

- Self-powered + passive loudspeaker couple kit
- Full-range, 2 way (6" + 1") loudspeakers
- Stereo balanced input with Euroblock connectors (MASTER unit)
- Stereo unbalanced input with RCA connectors (MASTER unit)
- Euroblock SLAVE unit connector
- Integrated 2 x 20 W RMS amplifier (MASTER unit)
- Integrated and universal power supply (MASTER unit)
- Auto stand-by function (saving energy is assured, no need for a daily ON / OFF switching)
- 2 band tone control & volume control knobs easily identified and gestured
- Anti-Clip integrated system
- ON / STD. BY, Signal Present and CLIP LED indicators
- Reinforced ABS construction
- Available in black or white
- Included wall bracket and security steel cable
- Compatible with the AUDEO series desktop and microphone stand mounting accessories

Technical Characteristics		AUDEO 106P
Power		2x18W@4Ω 1% THD
		2x22W@4Ω 10% THD
Frequency response		40Hz - 50kHz (-3dB)
THD + Noise @ 1 kHz Full power		‹0.15%
Inputs Sensitivity nom/ Impedance	LINE UNBAL	0dBV (-10dBV*)/›22kΩ
	LINE BAL	-10dBV/›22kΩ
Outputs Level/Minimum load	AUX OUT	0dBV/ ›5kΩ
	INSERT	0dBV/ ›2kΩ
CMRR	LINE BAL	›60dB @ 1kHz
Tone control (all)	BASS	100Hz ±10dB
	TREBLE	10KHz ±10dB

		AUDEO 106P
Signal Noise Ratio	LINE	›75dB
Auto Standby*	LEVEL	-40dBV aprox
	TIME	2min. aprox.
Power consumption:	Pink noise, 1/8 power@ 4ohm	15VA/10W
	Pink noise, 1/3 power@ 4ohm	24VA/18W
	Power consumption Standby	‹3W
Dimensions WxDxH		242x242x163mm
Weight	Active cabinet	2.5kg
	Passive cabinet	1.7kg

Accessories

- **DSTANDAUDEO** desktop stand
- **MSTANDAUDEO** standard microphone stand adapter
- **AUDEOSB110P** self-powered subwoofer reinforcement unit

Applications

- Education classrooms
- Multimedia, corporate and conference meeting rooms
- Retail stores
- Leisure centres
- Health and sport centres
- Museums
- Residential buildings

The NEST106 installation speaker is the result of an in-depth analysis of current and future needs for background music and voice systems. Retail stores, shopping malls, schools, conference rooms, hotels, industrial facilities, offices, museums, meeting halls, hospitals, recreational areas, etc. are just some of the more obvious and direct applications for the NEST106. However, being aware of the considerable variety of locations and situations that can play host to a speaker, the design team at Ecler wanted to take it a step further and has made the dreams of increasingly more demanding installers and decorators come true:

- **Integration.** The special shape of the NEST106, with a front panel in the shape of a partial sphere (1/8th of a sphere) and the back in the shape of a triangular pyramid, permits a wide variety of potential installations, ranging from an individual loudspeaker cabinet, fitting perfectly in a corner, to several units combined to make portions of a sphere or even a complete sphere.

- **Exclusivity.** There is no other speaker like it. It is a unique Ecler design that is different, personal and most importantly: can be adapted to a wide variety of situations. It consists of a two-way system with a concentric tweeter on top of a woofer.

- **Flexibility.** The NEST106 comes with a switch that lets you configure the speaker for its desired function. All of the boxes can work in low or high impedance (100 V line), and in the latter case, at different levels of power. Simple, quick and versatile.

- **Reliability and quality.** The NEST106 is, first and foremost, a speaker with a surprising sound quality, particularly in view of its size. This is due in part to its particular shape, which produces an interior volume that is much higher than the subjective, perceived volume. 60 W RMS of power with a performance of 93 dB SPL@1W/1m are hard to beat in speakers with these characteristics.

Key features

- Full range, 2-way speaker.
- Built-in 100 V line transformer
- 8 ohms / 100V (7, 10, 15 or 30 W) operating selector switch
- Euroblock-type connector
- Comes with accessories for wall-mounting, connectors, screws and Allen key
- IP54 class for installing outdoors

Technical Characteristics	NEST106
Ways	2
Nominal low impedance	8Ω
Max RMS power	60W
Program power	120W
Nominal high impedance	100V LINE
Power selector	5/7,5/15/30W
Efficiency SPL 1W 1m	93dB
Frequency response at –6dB @ 8Ω	110Hz ÷ 20kHz
Dimensions WxHxD (without accessories)	330x230x197mm
Weight	3.250kg

Applications

- Messages and background music over 100 V or low impedance lines
- Shopping and leisure centres
- Corporate and residential buildings
- Commercial premises, franchise stores
- Museums, exhibition halls
- Sound reinforcement in discos, bars and restaurants

Accessories

- **MP106NEST2:** 2 NEST106 units wall mount bracket
- **MP106NEST3:** 3 NEST106 units corner mount bracket
- **MP106NEST4**: ceiling bracket for half sphere configurations (4 NEST106 units)

Recommended amplification

- **DPA**, **GPA** and **XLA** series
- **HMA120** and **HMA180** self-powered mixers
- **CA** series compact RS-232 amplifiers
- **MPA-R** multi-channel amplifiers line (low impedance or high impedance with DLA adapters)
- **NXA** multi-channel amplifiers with built-in DSP and remote Ethernet management (low impedance)
- **HZA** multi-channel 100 V line amplifiers
- **HSA** series amplifiers (high impedance)

LOUDSPEAKER CABINETS

PHS20T, PRS10T, MSP50T, IG108

PHS20T, MSP50T and PRS10T are products carefully selected for the most extended 100V/70V paging and background music applications, offering durability and optimal speech and music reproduction. All models are manufactured in reinforced ABS and are IP rated and therefore suitable for outdoor superior performance.

Applications

- General paging and background music reproduction in 100V/70V installations

PHS20T Key features

- ABS weatherproof horn loudspeaker
- IP56
- Power tappings (100V) : 15, 7.5, 3.75, 2 W
- 20 W RMS/8 ohms
- Freq response (-3dB): 300Hz - 8kHz
- Efficiency: 102 dB SPL 1W/1m
- Dimensions (diameter x depth) : 200x233 mm
- 1.3 Kg

PRS10T Key features

- ABS weatherproof sound projector
- IP55
- Power tappings (100V) : 10, 5, 2.5 W
- Freq response (-3dB): 130Hz - 15kHz
- Efficiency: 91 dB SPL 1W/1m
- Dimensions (diameter x depth) :136x220 mm
- 1.6 Kg

MSP50T Key features

- ABS weatherproof two way musical horn
- IP56
- Power tappings (100V) : 50, 25, 12.5, 9, 4.5, 3.5W
- Freq response (-3dB): 90Hz-20kHz
- Efficiency: 99 dB SPL 1W/1m
- Dimensions (mm): 250x360x320
- 3.9 Kg

IG108

The IG108 is an in-ground weatherproof loudspeaker (IP65) with an omni directional horizontal dispersion pattern (360º). It is ideal for music and message applications in outdoor areas where a reliable yet high quality sound system is required.

Key features

- IP65 outdoor rated loudspeaker
- 100 W RMS @ 8 ohms
- Efficiency: 91 dB SPL 1 W / 1 m
- 8 ohm / 100 V (7,5, 15, 30 o 60 W) tap switch
- 8" Kevlar woofer and 1" ACCW silk dome tweeter
- Frequency response (-6 dB): 65 Hz to 22 kHz
- Omni directional horizontal coverage pattern (a cir cular area with an average radius of 4 to 6 meters can be covered by one unit)
- Security ground bracket included
- Diameter: 366 mm
- Height: 394 mm
- Weight: 7.5 kg

Technical Characteristics	PRS10T	PHS20T	MSP50T
Nominal low impedance		8W	8W
RMS power	10W	20W	50W
Nominal high impedance	100V LINE 10, 5, 2.5W	100V LINE 15W, 7.5W, 3.75W, 2W 70.7V LINE 15W, 7.5W, 3.75W, 2W, 1W	100V LINE 50, 25, 12.5, 9, 4.5, 3.5W
Frequency response (-6dB)	150Hz - 15kHz	300Hz - 8kHz	70Hz - 20kHz
Sensitivity 1W/1m	91dB	102dB	99dB
Dimensions (diameter x depth)	136x220mm	200x233mm	250x360x320mm
Weight	1.6kg	1.35kg	3.95kg

Recommended amplification

- **DPA, GPA** and **LPA** series
- **HMA120** and **HMA180** self-powered mixers
- **CA** series compact RS-232 amplifiers
- **MPA-R** multi-channel amplifiers line (low impe dance or high impedance with DLA adapters)
- **NXA** multi-channel amplifiers with built-in DSP and remote Ethernet management (low impedance)
- **HZA** multi-channel 100 V line amplifiers
- **HSA** series amplifiers (high impedance)

A line of self-powered speakers made of high-density plastic with great resistance. Separate amplifiers for low and high frequencies. Integrated 2-channel mixer. Three models whose high quality and versatility make them ideal for use in fixed and mobile applications and also as stage monitors.

The external design of the speakers, which is modern and balanced, has been created in collaboration with the reputed team Giugiaro Design.

Key features

- Full range, 2-way, self-powered speakers
- Active crosover with 24 dB/oct slope
- Two MICRO/LINE XLR inputs with sensitivity switch
- Two way mixer
- 3-band tone control at mixer output
- Balanced "STACK OUT" output for connection to other units or amplifiers
- Effective protection system to reduce signal clipping
- Carry handles at the rear
- 6 flying points
- Prepared for landscape installation on the ground, with no need for accessories
- Protective grille at the front, acoustically transparent
- 35 mm stand at the base for pole mount

VERSO8P

- 200 W RMS
- maximum SPL: 118 dB
- HxV dispersion: 80°x 60°
- 8" polypropylene woofer and 25 mm compression driver
- Frequency response (-3dB): 80 Hz - 20 kHz
- Dimensions: 291 x 241 x 398 mm
- Weight: 9.9 kg

VERSO10P

- 300 W RMS
- maximum SPL: 120 dB
- HxV dispersion: 80°x 60°
- 10" woofer and 34 mm compression driver
- Frequency response (-3dB): 65 Hz - 20 kHz
- Dimensions: 350 x 290 x 475 mm
- Weight: 16 kg

VERSO12P

- 450 W RMS
- maximum SPL: 123 dB
- HxV dispersion: 80°x 60°
- 12" woofer and 44 mm compression driver
- Frequency response (-3dB): 50 Hz - 20 kHz
- Dimensions: 447 x 368 x 607 mm
- Weight: 24,05 kg

Handle for ease transportation

Technical Characteristics	VERSO8P	VERSO10P	VERSO12P
System	Active Crossover two way full range active cabinet		
Driver	1x8"(Bass) 1x34mm (Treble)	1x10"(Bass) 1x34mm (Treble)	1x12"(Bass) 1x44mm (Treble)
Power output (RMS)	200W	300W	450W
Maximum SPL (dB@1m)	118dB	120dB	123dB
Dispersion (HxV)	80" x 60"	80" x 60"	80" x 60"
Inputs sensitivity nom/impedance Micro	-40dBV 10mV 20kΩ	-40dBV 10mV 20kΩ	-40dBV 10mV 20kΩ
(Balanced) Line	-20dBV 316mV 20kΩ	-10dBV 316mV 20kΩ	-10dBV 316mV 20kΩ
Connector type	XLR3	XLR3	XLR3
Frequency response (-10dB)	80Hz~20kHz	65Hz~20kHz	50Hz~20kHz
Tone control Crossover frequencies	250Hz-5.5kHz	250Hz-5.5kHz	250Hz-5.5kHz
Gain	-20dB + 10dB	-20dB + 10dB	-20dB + 10dB
Signal present indicator	-35dBV	-35dBV	-35dBV
Mains	AC 115V/230V 50-60Hz	AC 115V/230V 50-60Hz	AC 115V/230V 50-60Hz
Power consumption (pink noise 1/8 power)	41VA	95VA	134VA
(pink noise 1/3 power)	45VA	112VA	168VA
(max. power)	350VA	680VA	770VA
Dimension (WxDxH mm/Pcs)	291x241x398mm	350x290x475mm	447x368x607mm
Packaging dimension (WxDxH mm/Pcs)	340x300x480mm	410x355x555mm	520x440x700mm
Net weight (kg/Pcs)	9.9kg	16kg	24.05kg
Gross weight	11kg	17.6kg	26.7kg

Applications

- Sound for events and audiovisual presentations
- Sound reinforcement
- Stage monitors
- Clubs, discos and leisure centres
- Mobile discos

LOUDSPEAKER CABINETS

VERSO8, VERSO10, VERSO12

A full range, 2-way speakers line made of high-density plastic material and with great resistance. Three models whose high quality and versatility make them ideal for use in fixed and mobile applications and also as stage monitors.

The external design of the speakers, which is modern and balanced, has been created together with the reputed team Giugiaro Design.

Key features

- Full range, 2-way speakers
- Carefully-studied selection of components
- Efficient Larsen high-frequency protection system (feedback) and signal clipping
- Carry handle at the rear
- 6 flying points
- Prepared for landscape installation on the ground, with no need for accessories
- Protective grille at the front, acoustically transparent
- 35 mm stand at the base for pole mount
- Speakon® connectors

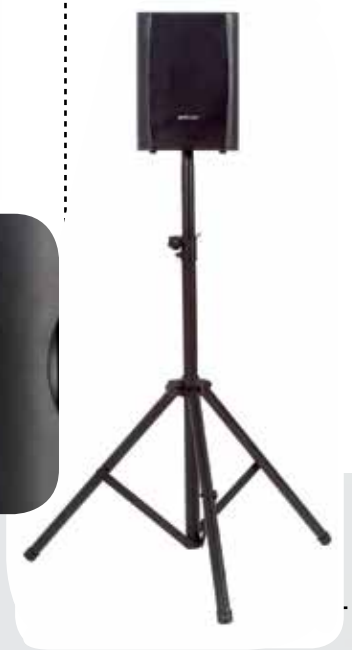

VERSO8

- 150 W RMS / 8 ohms (300 W programme)
- Output: 97 dB SPL 1 W / 1 m
- HxV dispersion: 80°x60°
- 8" polypropylene woofer and 25 mm compression driver
- Frequency response (-3dB): 70 Hz - 18 kHz
- Dimensions: 291 x 241 x 398 mm
- Weight: 8 kg

VERSO10

- 250 W RMS / 8 ohms (500 W programme)
- Output: 96 dB SPL 1 W / 1 m
- HxV dispersion: 80°x60°
- 10" woofer and 34 mm compression driver
- Frequency response (-3dB): 60 Hz - 18 kHz
- Dimensions: 350 x 290 x 475 mm
- Weight: 12.5 kg

VERSO12

- 350 W RMS / 8 ohms (700 W programme)
- Output: 98 dB SPL 1 W / 1 m
- HxV dispersion: 80°x60°
- 12" woofer and 44 mm compression driver
- Frequency response (-3dB): 50 Hz - 18 kHz
- Dimensions: 447 x 368 x 607 mm
- Weight: 20.35 Kg

Technical Characteristics	VERSO8	VERSO10	VERSO12
System	Built-in Crossover two way full range speaker		
Driver	1x8"(Bass) 1x34mm(Treble)	1x10"(Bass) 1x34mm(Treble)	1x12"(Bass) 1x44mm(Treble)
Frequency response (-10dB)	80Hz-20kHz	60Hz-18kHz	50Hz-18kHz
Sensitivity (dB@1m 1W)	97dB	96dB	98dB
Impedance	8 ohms	8 ohms	8 ohms
Power rating (RMS)	150W	250W	350W
Maximum SPL (dB@1m)	119dB	120dB	123dB
Dispersion (HxV)	80"x60"	80"x60"	80"x60"
Connector type	2xNL4	2xNL4	2xNL4
Dimension(WxDxH mm/Pcs)	291x241x398mm	350x290x475mm	447x368x607mm
Packaging Dimension (WxDxH mm/Pcs)	340x300x480mm	410x355x555mm	520x440x700mm
Net weight (kg/Pcs)	8kg	12.5kg	20..35kg
Gross weight (kg/Pcs)	9kg	14kg	22.7kg

Applications

- Sound for events and audiovisual presentations
- Sound reinforcement
- Stage monitors
- Clubs, discos and leisure centres
- Mobile discos

VERSOSB115P

The VERSOSB115P is the self-powered subwoofer reinforcement unit of the VERSO series. Its compact design is ideal for those musical mobile applications where you need an extra punch at the low-end side of the audible spectrum.

Key features

- 15" driver
- 500 W RMS integrated amplifier
- XLR inputs with mono conversion
- XLR stack outputs (link to other SB115P units, VERSO P speakers, etc.)
- PHASE and volume controls
- Internal 100 or 150 Hz LPF (selectable)
- Top-hat 35 mm. standard pole mount socket
- Optional wheel kit (QRA + WH200 KIT)

VERSO AND VERSOP ACCESSORIES

BAGVERSO8, BAGVERSO10, BAGVERSO12

CNX2RCAXLR2

CNXRCAXLR2

CNXXLRXLRIM5/5/10/20

Technical Characteristics	VERSOSB115P
System	Bass active cabinet
Driver	15"x1
Power output (RMS)	500W
Maximum SPL (dB@1m)	125dB
Inputs sensitivity nom/impedance	0dBV 1V 20kΩ (Balanced)
Input connector type	XLR3 balanced
Stack connector type	XLR3 balanced
Frequency response (-3dB)	35Hz~100Hz /35Hz~150Hz
THD + Noise @ 1kHz Full power	<1%
Low pass filter 12dB/oct.	100Hz / 150Hz
Indicators:	
Signal present	-40dBV
Clip	
Mains	AC 115V/230V* 50-60Hz
Power consumption (pink noise, 1/8 power)	250VA
(pink noise, 1/3 power)	440VA
Dimension (WxDxH) (without accessories)	590x490x450mm
Net weight	41.3kg

Audio signal connections

High quality pre made audio connections complete the Verso versatility:

- **CNX2RCAXLR2**: 2 x RCA (stereo) - 1 x XLRM 2 m wire
- **CNXRCAXLR2**: RCA - XLRM 2 m wire
- **CNXXLRXLR**: 1M5 / 5 / 10 / 20: XLRM - XLRF 1.5, 5, 10, 20 m wire

XLR - XLR cables are available in four different wire lengths: 1.5, 5, 10 and 20 m. All connections use OFC and PVC protective jacket. Stereo to mono connections include internal resistors for load protection and proper audio signal addition.

Transportation bags

- **BAGVERSO8, BAGVERSO10, BAGVERSO12**: bag for easy transportation and storage

Wall brackets and tripod mounting

- **SR8**: wall support for VERSO8, VERSO8P, VERSO10, VERSO10P
- **SR12**: wall support for VERSO10, VERSO10P, VERSO12, VERSO12P

LOUDSPEAKER CABINETS

DACORDT108I, DACORDH206I, DACORDH208I, SB208, SB212

The new DACORDi series is an update to the successful DACORD series based on requests by our clients and an added series of improvements:

- The impedance has been changed from 4 to 8 ohms, which is very important in configurations with a large number of loudspeakers, since it facilitates the task of connecting them in parallel or in parallel-series combinations.
- New look: new, remodelled front grille with interior sound screen and new logo

Key features

- Loudspeaker cabinets in high-quality 15 mm plywood
- Lyre bracket included for ceiling or wall mounting (except on DACORDT108i)
- 1.5 mm front grille with internal acoustically transparent screen
- Built-in passive filter
- HI/LO high frequency response switch
- Speakon connectors (input and stack) built into carry handle
- Available in black and white
- For extra reinforcement of low tones, we recommend using DACORDSB208 or DACORDSB212.

Applications

- Shops and stores
- Sports centres
- Conference rooms
- Audiovisual presentations
- Corporate halls
- Perimeter support in clubs
- Cafes
- Restaurants
- Theme parks

Accessories

- **SRDABK/WH** accessory for anchoring in ceilings. Facilitates direction of the sound box.

Recommended amplification and processing

- DPA series + ALMAcard integrated DSP card
- GPA and LPA series
- MPA-R multi-channel amplifiers
- NXA multi-channel digital amplifier-mixers with built-in DSP and remote Ethernet management

DACORDT108i

SRDABK

DACORDT108I

Ultra compact, high-performance speaker for sound in dance clubs, theme restaurants, cafés, businesses, etc.

- Compact full-range two-way loudspeaker
- 150 W RMS/8 ohms – 300 W programme
- Efficiency: 93 dB SPL 1 W/1 m
- 8" polypropylene woofer, 52 mm coil
- 1" tweeter
- 7,62 kg
- Frequency response (-3 dB): 78 Hz – 22 kHz
- Dimensions (mm): 300x310x280
- 6xM8 hanging points

DACORDT108i Accessories

SR100:

- Meets Vesa 50/75/100 mm
- Load capacity: 30 kgs
- Tilt: -30 ~ 0 degree, Swivel: 180 degree
- Material: Steel
- Speaker to Wall : 105mm
- Hardware included

SR100

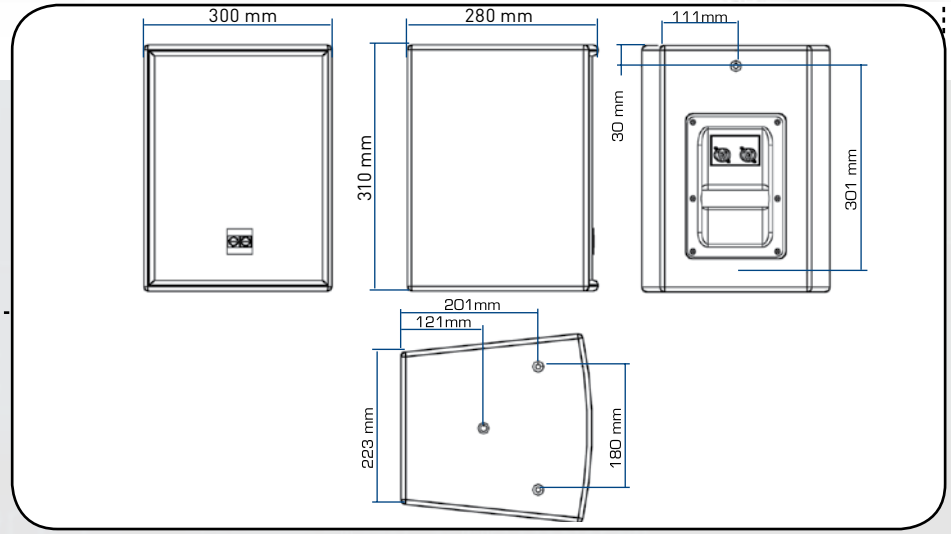

Technical Characteristics	DACORD T108i	DACORD T208i	DACORD H206i	DACORD H208i	DACORDSB208	DACORDSB212
Ways	2	2	2	2	1	1
Nominal impedance	8Ω	8Ω	8Ω	8Ω	4Ω	4Ω
Max RMS power	150W	300W	220W	300W	300W	700W
Program power	300W	600W	440W	600W	600W	1400W
Efficiency SPL 1W 1m	93dB	91dB	95dB	93dB	93.5 dB	98 dB
Max SPL 1m	-	-	-	-	122.5 dB	126 dB
Frequency response at –10dB	60Hz÷20kHz	55Hz÷20kHz	65Hz÷20kHz	55Hz÷20kHz	40Hz÷200Hz	40Hz÷300Hz
Filter cut-off frequency (slope –6 &-12 dB/oct)	4.5kHz	4.5kHz	3.5kHz	3.5kHz	-	-
Horizontal dispersion	-	-	90º	90º	-	-
Vertical dispersion	-	-	60º	60º	-	-
High frequency attenuation switch	-	-	6dB	4dB	-	-
Dimensions (without accessories) mm	300x310x280	478x360x332	218x645x272	282x670x310	548x467x355	696x590x474
Weight	7,62kg	13.90kg	12.50kg	14.45kg	21.85kg	45.35kg

DACORDH206I

Designed to provide high levels of sound pressure in a compact, lightweight, easy-to-integrate design concept. Additional versatility: its Presence switch allows for rapid adjustment of high frequencies for optimum response for any situation or use.

- Compact full-range two-way loudspeaker
- 220 W RMS/8 ohms – 440 W programme
- Efficiency: 95 dB SPL 1 W/1 m
- Double 6.5" woofer, 49.5 mm coil
- Exclusive 1" compression motor
- 90º x 60º adjustable horn
- Presence switch for adjusting high frequencies
- 12.5 kg
- Frequency response (-3 dB): 76 Hz – 19.5 kHz
- Dimensions (mm): 218x645x272
- 6xM8 hanging points

Ideal for low-ceiling applications. The DACORDSB208 increases its response in low frequencies and dual amplified applications.

DACORDH208I

Designed to provide high levels of sound pressure in a compact, lightweight, non-obtrusive design concept. Additional versatility: its Presence switch allows for rapid adjustment of high frequencies for optimum response for any situation.

- Full-range two-way loudspeaker
- 300 W RMS/8 ohms – 600 W programme
- Efficiency: 96 dB SPL 1 W/1 m
- Double 8" polypropylene woofer, 52 mm coil
- Exclusive 1" compression motor
- 90º x 60º adjustable horn
- Presence switch for adjusting high frequencies
- 14.45 kg
- Frequency response (-3 dB): 70 Hz– 19.5 kHz
- Dimensions (mm): 282x670x310
- 6xM8 hanging points

Especially intended for vocal reproduction. The DACORDSB208 increases its response in low frequencies and dual amplified applications.

SR10

SRDABK

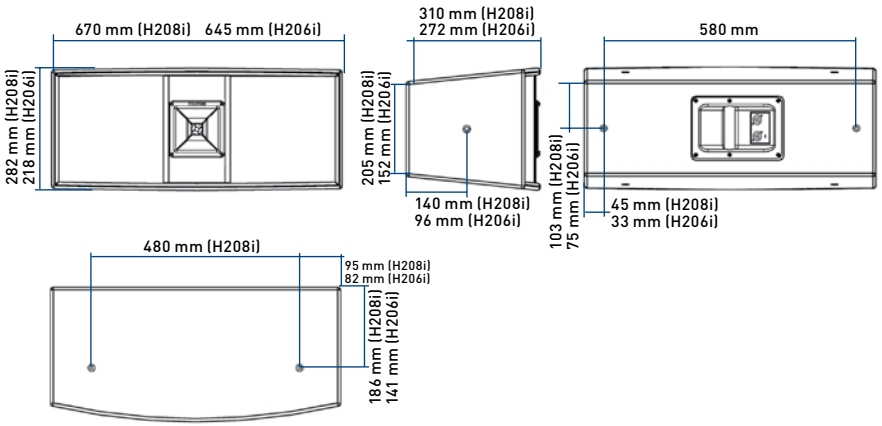

DACORDH206i Accessories

- **SR10**: adjustable wall anchor (225x150 mm). 85x150 mm wall plate, four 6 mm holes.
- **SRDABK/WH**: accessory for simple ceiling installation. Facilitates direction of the speaker

DACORDH208i Accessories

- **SRDABK/WH**: accessory for simple ceiling installation. Facilitates direction of the speaker

DACORDSB208

Following the steps of the new SB212, the SB208 is a very compact size and highefficiency subwoofer, ideal for the reinforcement of the DACORD and AUDEO series.

Key features

- 3 chamber dual 6th order bandpass cabinet
- Ways: 1
- Double 8" woofer
- 300 W RMS @ 4 ohms (600 W program)
- Low pass filter tuned at 120 Hz, 12 dB / octave
- Efficiency SPL 1 W / 1 m: 93.5 dB
- Max SPL 1 m: 122.5 dB
- Frequency response at -10 dB: 40Hz to 200Hz
- Flying points available in top and bottom faces (logo can rotate 180º)
- Dimensions (without accessories): 548 x 467 x 355 mm
- Weight: 21.85 kg

DACORDSB212

With a focus based on permanent contact and follow-up with installers and interior design and system integration professionals, the DACORD line of speakers is intended for fixed installation, especially in environments requiring a compact, high-performance, easy-to-install loudspeaker with excellent sound quality.
This subwoofer was specially designed to complement the other speakers in the DACORD/DACORDi and VERSO series.
It was manufactured using high-quality 18 mm plywood.
It includes two 12" woofers with a ceramic magnet and a 75 mm coil.

Key features

- Three-chamber speaker box, 6th order bass filter
- Ways: 1
- Nominal impedance: 4Ω
- RMS power: 700 W
- Programme power: 1400 W
- SPL performance 1 W / 1 m: 98 dB
- SPL maximum 1 m: 126 dB
- Frequency response at -10 dB: 40 Hz to 300 Hz
- Dimensions (without accessories): 696 x 590 x 474 mm
- Weight: 45.35 kg

POLAR PLOTS

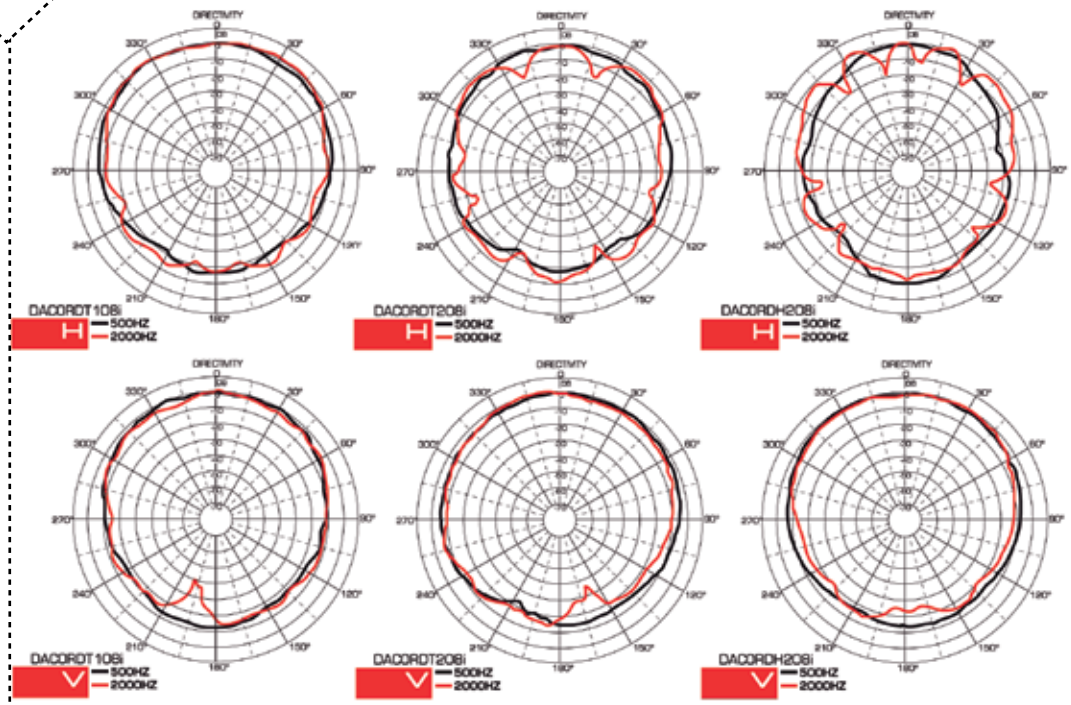

FREQUENCY RESPONSE

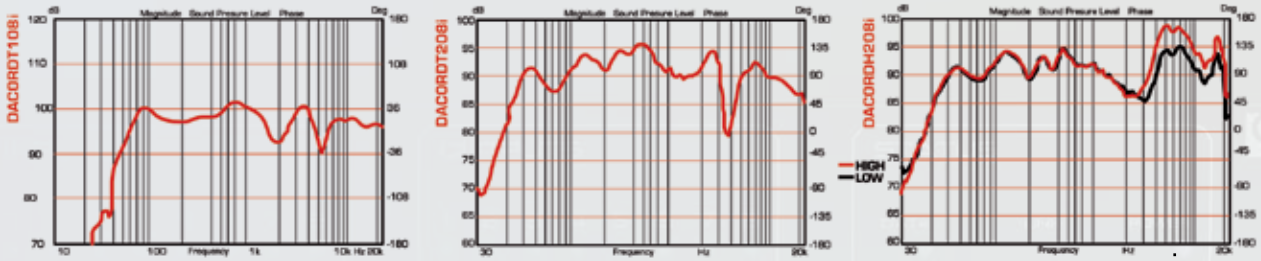

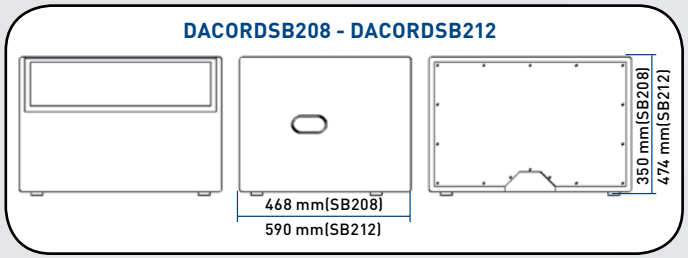

Recommended amplification

- GPA, NXA and DPA.

Applications

- Reinforcing DACORDi and AUDEO series

UMAi series is the optimal solution for a wide range of applications including portable and fixed sound reinforcement, club applications, AV events and any installation requiring professional sound quality and reliability.
Manufactured in 15mm birch plywood, the UMAi series is based in high performance, top quality 12", 15" and 18" woofers and high end compression drivers to provide a clear natural sound for both musical and speech programmes in a compact and light enclosure.

Key features

- 15mm birch plywood full range 2 way loudspeaker cabinets
- Accurate component selection
- Fast set-up thanks to integrated lateral and extra back handles
- Textured black paint finish
- Protective front grid
- M10 internally steel reinforced flying points
- Speakon® connectors integrated in back handle
- 35 mm top-hat pole mount socket

Recommended amplification and processing

- **DPA** series + **ALMAcard** integrated DSP card
- **GPA** and **LPA** series
- **MPA-R** multi-channel amplifiers
- **NXA** multi-channel digital amplifier-mixers with built-in DSP and remote Ethernet management

Applications

- Live club performances
- AV presentations and installations
- Corporate productions
- Clubs, Pubs and Bars Installs
- Side fill monitoring
- Church vocal and music playback
- Sports events
- Theme parks

Technical Characteristics	UMA112i	UMA115i	UMASB118i
Ways	2	2	1
Nominal impedance	8Ω	8Ω	8Ω
Max RMS power	350W	450W	500W
Program power	700W	900W	1000W
Efficiency SPL 1W 1m	98dB	100dB	102dB
Frequency response at -3dB	55Hz÷19.5kHz	47Hz÷19.5kHz	45Hz÷15kHz
Filter cut-off frequency (slope -6& -12dB/oct)	3.5kHz	3.5kHz	-
Dispersion	(50°-100°)x55°	(50°-100°)x55°	-
Dimensions WxHxD (without feet)	448x580x395mm	507x650x456mm	507x645x513mm
Weight	21.3kg	25.2kg	32.6kg

12x M10
flying points

UMA112I

Compact trapezoidal loudspeaker cabinet essentially targeted for applications which call for compact size, excellent output and ease of transportation.

- 350 W RMS / 8ohms
- 12" woofer. 77mm voice coil. Ceramic magnet
- 1" Mylar compression driver mounted in an axis asymmetrical horn:
  - 50º - 100º H dispersion
  - 55º V dispersion
- 35mm top hat fitting
- Stackable or pole mounting on UMA SB118i sub-bass

Accessories UMA112i

- **POLE01**: adjustable 35 rod for UMA112 pole mounting on UMASB118i
- **SR12**: wall bracket

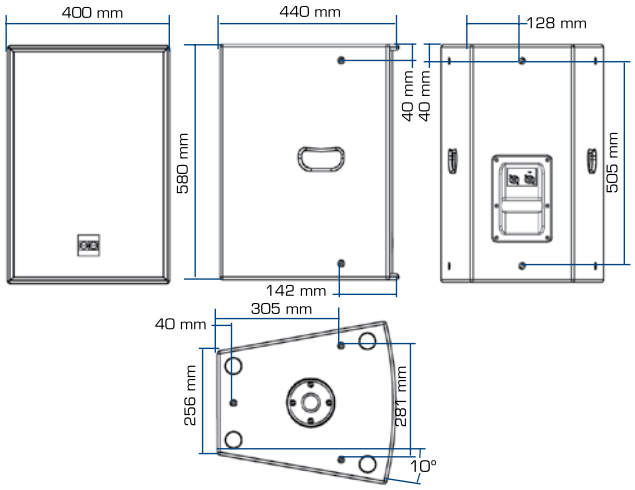

LOUDSPEAKER CABINETS

UMA112I, UMA115I, UMASB118I

UMA115i

UMA115I

Compact trapezoidal loudspeaker cabinet essentially targeted for applications which call for compact size, high power and ease of transportation under a 15" approach.

- 450 W RMS / 8ohms
- 15" woofer. 100mm voice coil.
- Ceramic magnet
- 1" Mylar compression driver mounted in an axis asymmetrical horn
- 50º - 100º H dispersion
- 55º V dispersion
- 35mm top hat fitting
- Stackable on UMASB118 sub-bass

UMASB118i

UMASB118I

Sub bass loudspeaker cabinet designed to complement UMAi series. UMASB118i provides extended bass response for applications like live club performances and AV presentations.

- Sub bass 500 W RMS / 8ohms direct radiating bass reflex enclosure
- 18" woofer. 100mm voice coil.
- Ceramic magnet
- Integrated lateral and extra back handles
- 35mm top hat fitting for UMA112i pole mounting

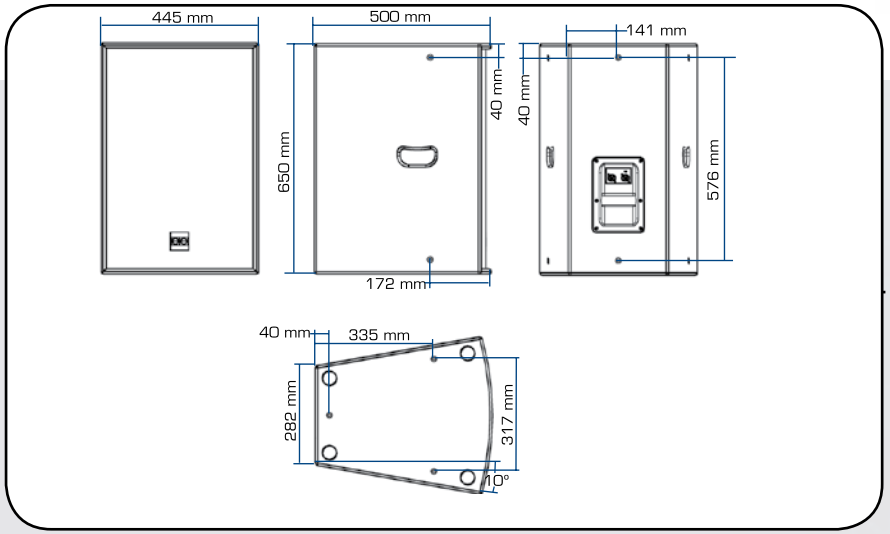

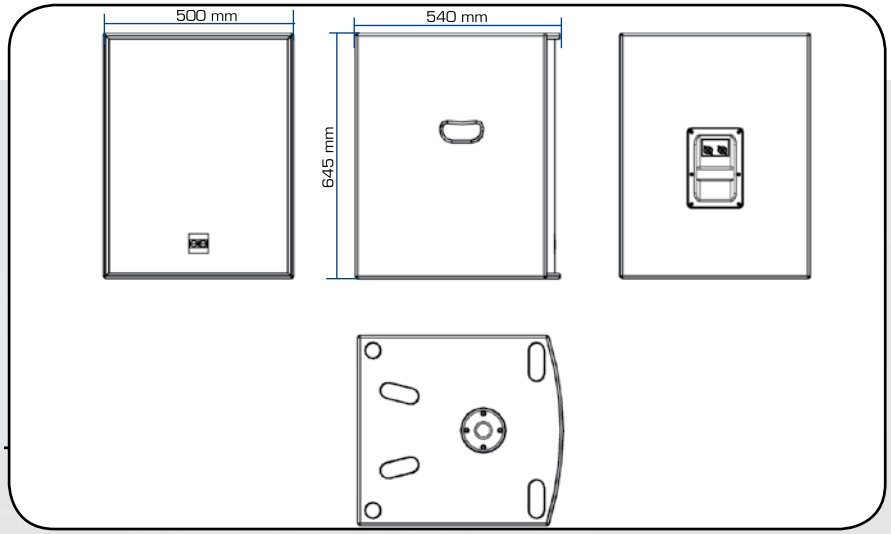

FREQUENCY RESPONSE

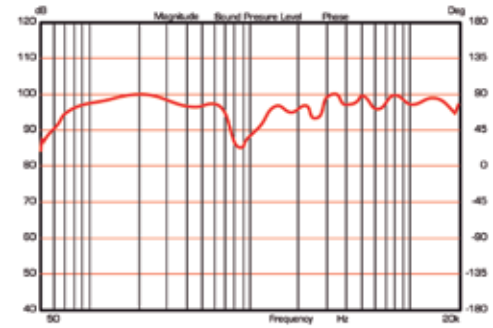

UMA112i

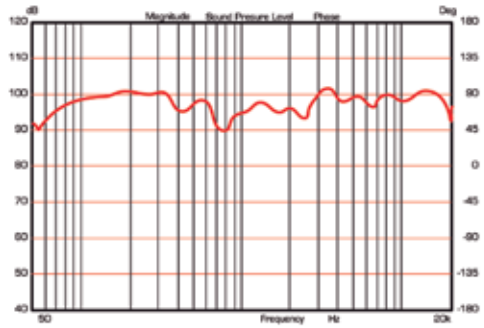

UMA115i

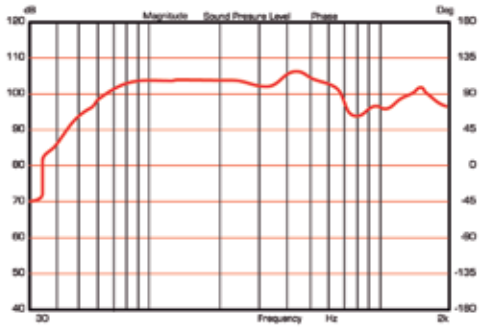

UMASB118i

POLAR PLOTS

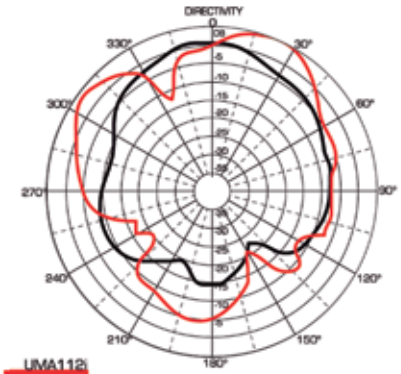

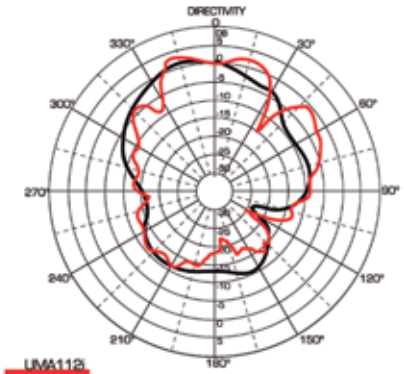

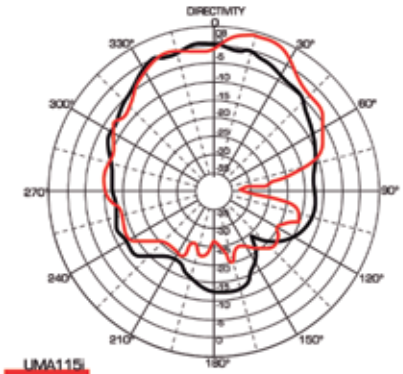

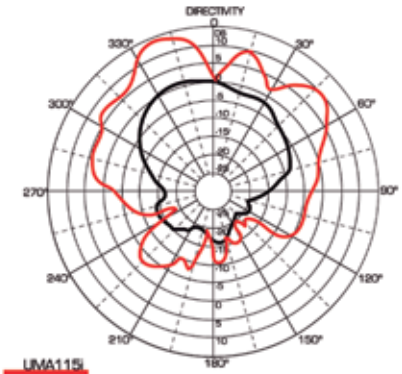

LOUDSPEAKER CABINETS

CKL110T, CKLSM115T, DPC 118

Long throw loudspeaker cabinets range. Manufactured in 18mm multi-layered Finnish birch plywood. Targeted to long through vocal reproduction as well as music reinforcement applications in adverse acoustic environments.

Key features

- Long throw multi-layered Finnish 18mm birch plywood loudspeaker cabinets range
- Internally reinforced. Trapezoidal shape
- Careful component selection
- Superior efficiency values: up to 112dB 1W/1m
- Scratch and shock proof polyurethane paint finish
- Side handles for easy set up
- 1.5mm protective front grid and acoustically transparent foam against dust and splashes
- Six ISO 7166 air cargo tracks for precise rigging
- Speakon connectors
- EASE 4.1 Files available

CKL110T

- 2 way, full range mid-high loudspeaker cabinet
- 350 W RMS/8 ohms – 700 W program
- Efficiency: up to 112 dB SPL 1W/1m
- 10" enclosed speaker with neodymium motor and carbon fibre compound diaphragm attached to a Tractix horn with phase corrector
- 2" compression driver with pure titanium diaphragm, neodymium motor
- 60°x40° constant directivity diffuser
- Freq response (-3dB): 170Hz – 19kHz
- Dimensions (mm) : 550x550x650
- 47 Kg

CKLSM115T

- Mid-low frequencies loudspeaker cabinet
- 600 W RMS/ 8 ohms – 1200 W program
- Efficiency: up to 105 dB SPL 1W/1m
- High performance horn loaded 15" speaker
- Freq response (-3dB): 70Hz – 280Hz
- Dimensions (mm): 550x550x650
- 37,2 Kg

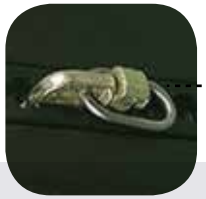

Six air cargo tracks for precise rigging

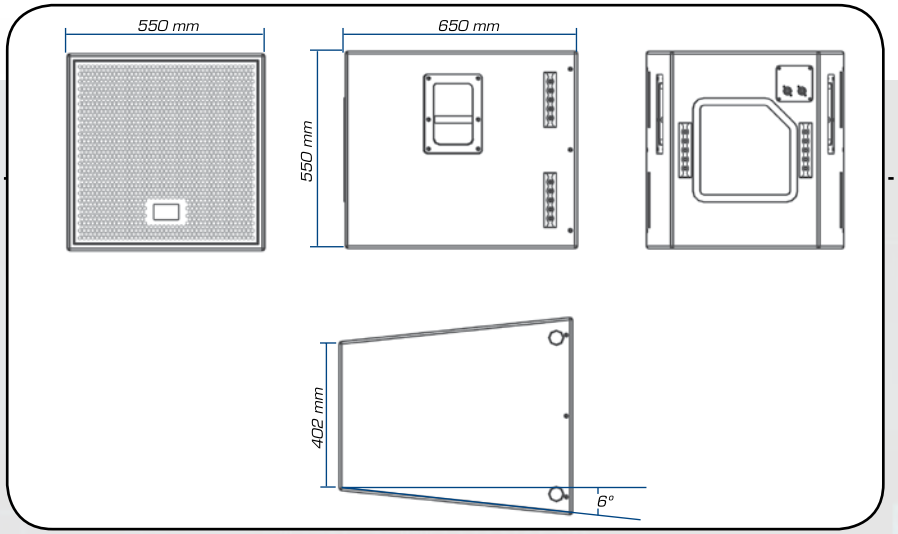

Technical Characteristics	CKL110T	CKLSM115T
Ways	2	1
Nominal impedance	8Ω	8Ω
Max RMS power	350W	600W
Program power	700W	1200W
Efficiency SPL 1W 1m	112dB	105dB
Frequency response at -3dB	170Hz÷19kHz	70Hz÷280Hz
Horizontal dispersion	80°@250Hz / 60°@4kHz	-
Vertical dispersion	80°@250Hz / 40°@4kHz	-
Dimensions WxHxD (without feet)	550x550x650mm	550x550x650mm
Weight	47g	37.2g

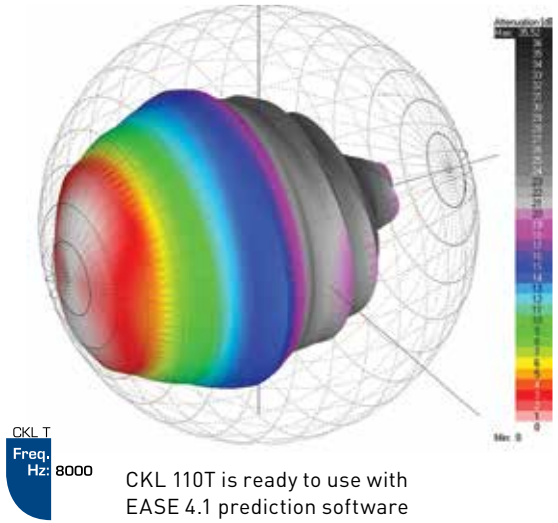

CKL 110T is ready to use with EASE 4.1 prediction software

DPC118

- 1x18" subwoofer reinforcement unit for the CKL-T systems
- 1200 W RMS /8 ohms
- Dimensions: 570 x 750 x 720 mm
- Weight: 55,5 Kg

Applications

- Speech reinforcement in permanent installation like stadiums, sport pavilions, theatres, congress halls, houses of worship
- CKL SM115T extends low frequency response for music playback in permanent applications and events

Accessories

- **ADP**: cargo restraint double stud and ring
- **BAGCKLT**: CKL110T and CKL SM115 storage and transportation bag

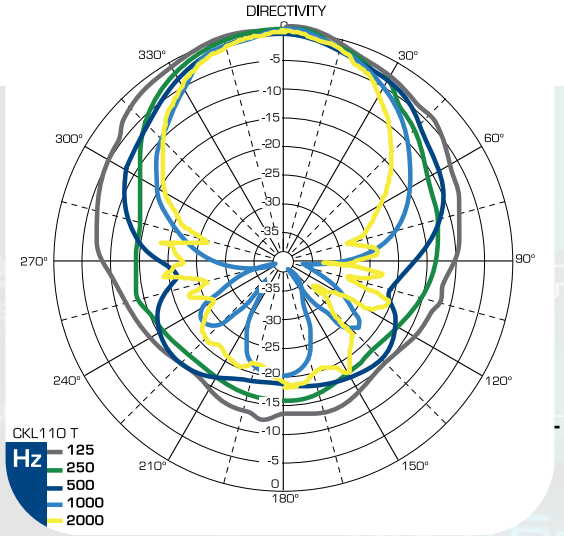

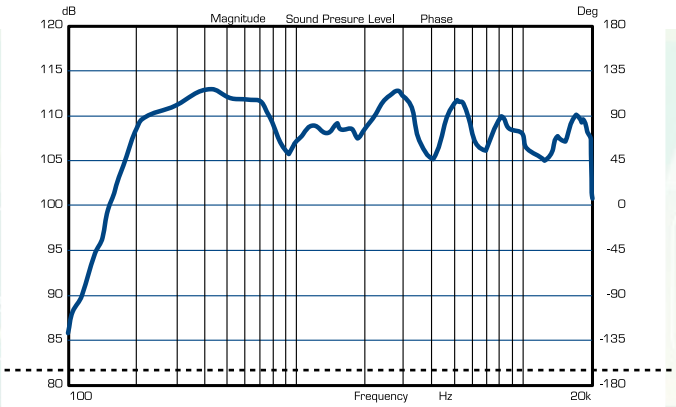

CKL110T

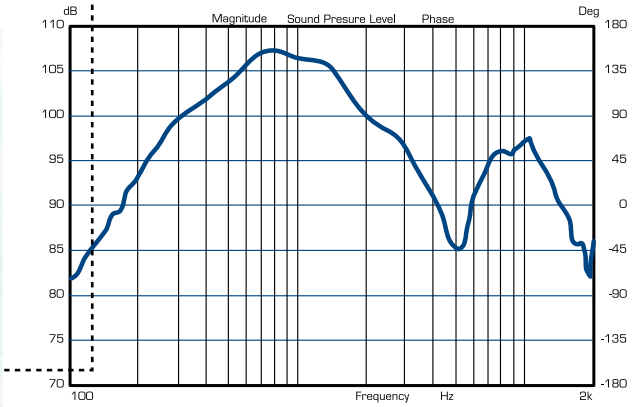

CKL SM115T

AMPLIFIER ACCESSORIES

DLA4-80, DLA6-80, DLA600

Multi-channel line adaptors permit the use of stereo and multi-channel low impedance amplifiers in 100V/70V applications keeping the best sound quality and ensuring maximum power match and amplifiers' load stability.

Key features

- 2, 4 and 6 channel 100V/70V line adaptors
- Excellent frequency response for optimal audio performance even in the low frequencies band
- Nominal input power handling (DLA4-80 and DLA6-80) : 80 W RMS/4 ohms
- Nominal input power handling (DLA600) : 80/150/300 W RMS/4 ohms
- EUROBLOCK INPUT and OUTPUT connectors
- 1 RU

DLA HIGH QUALITY APPROACH

DLA series uses the best audio autotransformers on the professional audio market.

The use of high quality units, allow amplifiers to drive 100V/70V lines no matter what the frequency band of the input signal.

Hence, amplifiers' possible output saturation is eliminated, thus avoiding the use of internal o external high pass filters that unnecessarily affect final sound quality.

Technical Characteristics	DLA600	DLA4-80	DLA6-80
Input power (nominal)	80/150/300W	80W	80W
input impedance at nominal power	4Ω	4Ω	4Ω
Output voltages	70/100W	70/100W	70/100W
Frequency response (-3dB)	20Hz÷30kHz	20Hz÷30kHz	20Hz÷30kHz
Dimensions (mm)	482.6 x 266.5 x 44	482.6 x 266.5 x 44	482.6 x 266.5 x 44
Weight	12kg	8.42kg	11.36kg

Best choice amplifiers

Every DLA model has been developed to match the following stereo and multi-channel amplifiers:

- **DLA4-80**: MPA4-80R, NXA4-80
- **DLA6-80**: MPA6-80R, NXA6-80
- **DLA600**: MPA4-150R, MPA6-150R, MPA4-400R, NXA4-200, NXA6-200, NXA4-400

Applications

- Multi-zone and stereo long wire run background and foreground facilities (70/100V lines)

ATA1-1R

A single telephone adapter, perfect for medium sized radio stations or any facility requiring impedance adaptation and galvanic insulation at the same time, to adapt line level signals to telephonic lines.

Key features

- 1 RU 19" Single line telephone adapter
- TEL SET , STBY and ON AIR switch: conversation can be held either by telephone or by means of dedicated microphone connected to the mixer in use
- Mixer signal level adjustment control
- Telephone line impedance adjustment control
- RJ11 SET and LINE telephone connectors
- RCA connectors to and from mixer

DAC110E

1 RU, 19" Distribution amplifier and splitter-mixer unit. Perfect choice in installations where a single sound source must be broadcasted to different receivers adapting impedance values and levels.

Key features

- 1 RU 19" Line level distribution amplifier
- Dual operation mode 1 mono input, 10 mono outputs or 1 stereo input, 5 stereo outputs
- 12dB INPUT gain control
- CLIP indicator in all INPUTS and OUTPUTS
- XLR INPUT and OUTPUT connectors
- CUT switch in all OUPUTS

Technical Characteristics		ATAI-IR
Transmiter circuit	Input sensitivity/impedance	-10 dBV/15 kΩ
	Nominal transmission level/600Ω	-10 dBV
	Adjustment margin	-20 to 0 dBV
	Transmission distortion	‹0.2%
	Frequency response (-3dB)	280Hz - 3.2 kHz
	Max. output level 1% THD	+10dBV / 600Ω
Receiver circuit	Nominal input level	-10dBV
	Adjustment margin	-20 to 0 dBV
	Telephone line input impedance	›300Ω
	Max. input level	+19 dBV
	Output level/min. load	-10dBV/2.2 kΩ
	Frequency response (-3dB)	280 Hz - 3.3 kHz
	Hybrid return attenuation	›10dB auto adj.
Mains		90-264VCA 47-63Hz
Power consumption		14VA
Dimensions Panel	(w x h) x depth	(482.6 x 44) 195mm
Weight		2.2kg

Technical Characteristics	DAC110 E
Input level/impedance	0 dBV/47 kΩ
Max. input level	+20 dBV
Output level/minimum load	0 dBV/600 Ω
Output impedance	75 Ω
Max. output level (with min. load)	20.2 dBV
Frequency response (-1dB)	2Hz - 95 kHz
Harmonic distortion (1kHz)	‹ 0.005%
TIM 100 (0 dBV)	‹ 0.003%
Noise 20Hz - 20 kHz	‹-102 dB
CMRR @ 1 kHz	› 60dB
Gain margin	± 12 dB
CLIP indicator	-3 dB real clip
LEAKAGE (@ 1kHz)	‹-110 dB
Channel crosstalk @ 1kHz	‹-80dB
Power consumption	19.8 VA
Dimensions Panel (w x h) x d	482.6 x 44 x 182 mm
Weight	2.7 kg

Applications

- Medium sized radio stations
- General audio distribution/splitter applications in permanent installations

WPm SERIES

WPmVOL, WPmVOL-J, WPmVOL-SR, WPmVOL-SR-J, WPmVOL-IR, WPmCNX-XLRM, WPmCNX-XLRF, WPmCNX-JRCA, WPmH-AT3, WPmH-AT6, WPmH-SL4, WPmMIX-T, WPmSCREEN, WPTOUCH, REVO-IR

Wall Panels series with magnetic front plate assembly

WPmVOL

Remote wall panel control for one output zone of a MIMO54/DAM614 unit (zone volume). RJ45 standard connector. Compatible with all Ecler 0-10V DC REMOTE control ports (MPA-R, ALMA, etc.) including the MIMO88 GPI ports. Surface-mount installation box included.

WPmVOL-J

Same features as WPm VOL + front panel stereo mini-jack connector.

WPmVOL-SR

Remote wall panel control for one output zone of a MIMO54/DAM614 unit (source selection and zone volume). RJ45 standard connector.
Volume control compatible with all Ecler0-10V DC REMOTE control ports (MPA-R, ALMA, etc.) including the MIMO88 GPI ports.
Surface-mount installation box included.

WPmVOL-SR-J

Same features as WPmVOL-SR + front panel stereo mini-jack connector.

WPmVOL-IR

IR to 0-10 V DC interface + IR remote control set. Volume UP, DOWN & MUTE functions converted from IR pulses to VCA voltages. Wall panel blind plate with IR receiver and IR activity LED (green-orange-red). REVO-IR Remote control included. Compatible with all Ecler 0-10V DC REMOTE control ports (MPA-R, ALMA, MIMO54/DAM614, etc), including the MIMO88 GPI ports. Surface-mount installation box included.

WPmCNX-XLRM

Connection Wall Plate with Male 3 pin XLR connector. Screw-type connector at the back (no solder needed). Surface-mount installation box included.

WPmCNX-XLRF

Connection Wall Plate with Female 3 pin XLR connector. Screw-type connector at the back (no solder needed). Surface-mount installation box included.

WPmCNX-JRCA

Connection Wall Plate with 1 x stereo minijack and 2 x RCA connectors.
Surface-mount installation box included

WPmH-AT3

100/70 V line attenuator with integrated 24 VCD priority relay. 3 W maximum output power. Surface-mount installation box included.

WPmH-AT6

100/70 V line attenuator with integrated 24 VCD priority relay. 6 W maximum output power. Surface-mount installation box included.

WPmH-SL4

100/70 V line selector (one out of 4 music program lines). Surface-mount installation box included.

WPmSCREEN

EclerNet Touch-screen wall panel

WPmSCREEN is a remote control panel compatible with all the EclerNet products, like MIMO88 and NXA. It features a 7" touch-screen and an integrated UCP (User Control Panel) client and server hardware: no computer is required to run an EclerNet project and become a UCP webserver, once one or more WPmSCREEN units are installed in an EclerNet project. See WPmSCREEN product page for further information.

WPTOUCH

- Digital remote control, compatible with the MIMO88 digital matrix (CAN-BUS)
- 2 touch-sensitive keys
- 1 touch-sensitive jog wheel
- 1 IR receiver
- 2x16 char. LCD transflective display
- Programmable under the MIMO88 control (digital mode)
- Compatible with the DAM614/MIMO54 for both volume control and source selection (analogue mode)
- Compatible with other products with 0-10 VDC ports (MPA, ALMA, CA, NXA, etc.) for volume control (using an external power supply)
- Recessed or top-wall mount with included accessory

WPmVOL, WPmVOL-J, WPmVOL-SR, WPmVOL-SR-J, WPmVOL-IR, WPmCNX-XLRM, WPmCNX-XLRF, WPmCNX-JRCA, WPmH-AT3, WPmH-AT6, WPmH-SL4, WPmMIX-T, WPmSCREEN, WPTOUCH, REVO-IR

WPmMIX-T

WPmMIX-T is a 2 channel micro-mixer which keeps the standard wall-panel format of the WPm series. I allows to a mix a stereo unbalanced signal (2 x RCA) with a microphone signal (XLR), getting a balanced mono output that can be sent to a preamplifier, amplifier, mixer, digital or analogue matrix, etc., thus saving inputs in the receiver device.
The MIC input includes a 2 band EQ (BASS, TREBLE) and it can use the talkover function to override the line signal when the microphone exceeds the talkover detection threshold.

- Unbalanced stereo line input (2 x RCA)
- Balanced microphone input with BASS and TREBLE controls and selectable Phantom power
- Independent volume controls for LINE and MIC inputs
- Talkover function available (MIC over LINE)
- External Power Supply Unit required (12 to 17 VDC). Suggested Ecler PSU unit: WP-PSU (a single WP-PSU unit can feed up to 20 WPmMIX-T units, depending on cable runs and sections)

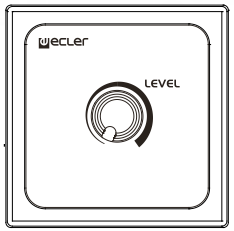

WPmVOL

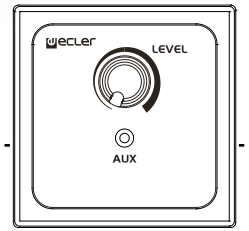

WPmVOL-J

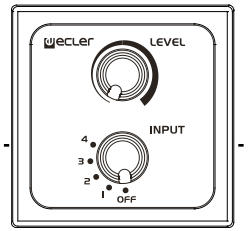

WPmVOL-SR

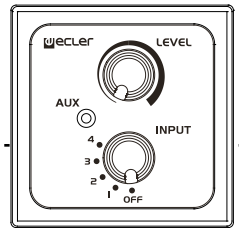

WPmVOL-SR-J

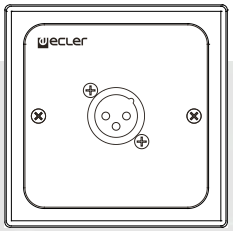

WPmCNX-XLRM

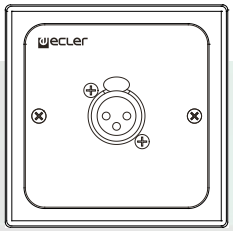

WPmCNX-XLRF

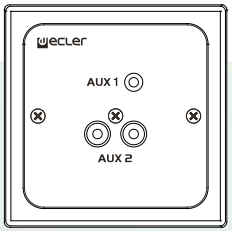

WPmCNX-JRCA

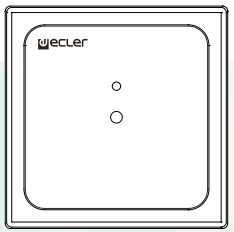

WPmVOL-IR

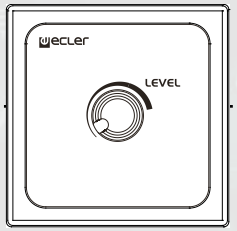

WPmH-AT3-AT6

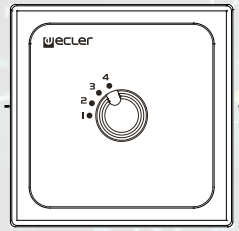

WPmH-SL4

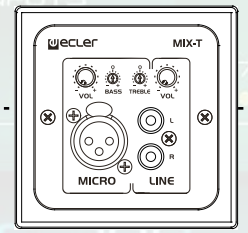

WPmMIX-T

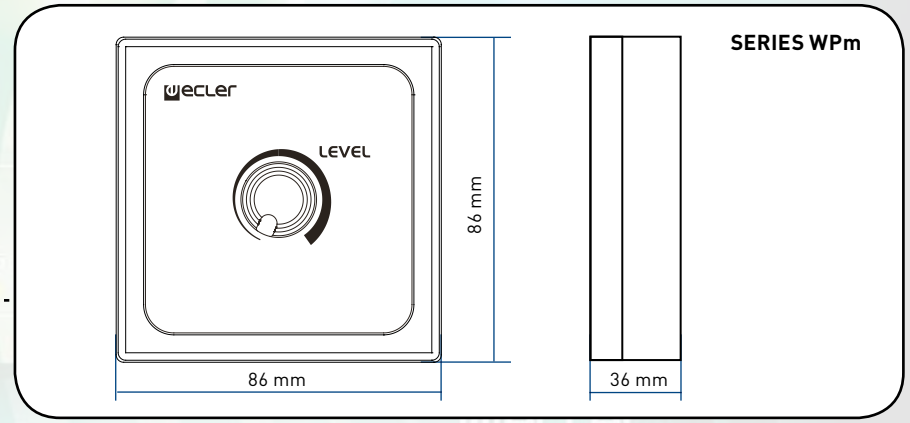

DESKTOP PAGING STATIONS

MPAGE16

MPAGE16 is a digital paging station for the MIMO88. It features 21 touch-sensitive keys that, together with the MIMO88 hardware, allow for an easy, flexible and user-friendly configuration of a paging system that can coexist with other MIMO88 functions and with other control hardware and/or software control systems.

Key features

- 16 zone selection keys
- SELECT ALL, CLEAR and PAGE keys
- Two user-defined functions keys (for recalling presets, activating GPOs, etc.)
- Gooseneck integrated microphone
- Several MPAGE16 or software (virtual) paging stations can work simultaneously (priorities and zones availability is managed by the MIMO88 software setup)

MPAGE4

MPAGE4 is the 4-zone desktop paging station for the MIMO54 / DAM614, allowing for real-time paging in addition to all the rest of features.

Key features

- 4 zone selection keys
- SELECT ALL, and PAGE keys
- Selectable chime melody
- Gooseneck microphone

MPAGE1

MPAGE1 is a 1-zone desktop paging station, compatible with any device including a phantom-powered microphone input (SAM series, COMPACT series, MIMO54 /DAM614, MIMO88, CA series, HMA series, etc.).

Key features

- 1 zone paging station
- PAGE key
- "PAGE ACTIVE" trigger port (GPO), for its connection to external devices
- Gooseneck microphone

	DUO-NET PLAYER	SAM series	COMPACT series	MIM054	DAM614	MIM088 / MIM088SG	CA series	HMA series	HSA series	HZA series	MPA series	GPA series	DPA series	NXA series	ALMA series	VERSO series	DACORDi series	UMAi series	CKL-T series	DPC 118
WPmSCREEN	•	–	–	–	–	•	–	–	–	–	–	–	–	•	–	–	–	–	–	–
WPmVOL	–	–	•	•	•	•	•	•	°	•	•	•	(1)	•	•	–	–	–	–	–
WPmVOL-J	–	–	•	•	•	•	•	•	°	•	•	•	(1)	•	•	–	–	–	–	–
WPmVOL-SR	–	–	•	•	•	•	•	–	–	–	–	–	–	–	–	–	–	–	–	–
WPmVOL-SR-J	–	–	•	•	•	•	•	–	–	–	–	–	–	–	–	–	–	–	–	–
WPmVOL-IR	–	–	•	•	•	•	•	•	–	•	•	•	(1)	•	•	–	–	–	–	–
WPmCNX-XLRM	–	•	•	•	•	•	•	•	•	•	•	•	•	•	•	–	–	–	–	–
WPmCNX-XLRF	–	•	•	•	•	•	•	•	•	•	•	•	•	•	•	–	–	–	–	–
WPmCNX-JRCA	–	•	•	•	•	•	•	•	•	•	•	•	•	•	•	–	–	–	–	–
WPmH-AT3	–	–	–	–	–	–	–	–	•	•	(2)	–	–	(2)	–	–	–	–	–	–
WPmH-AT6	–	–	–	–	–	–	–	–	•	•	(2)	–	–	(2)	–	–	–	–	–	–
WPmH-SL4	–	–	–	–	–	–	–	–	•	•	(2)	–	–	(2)	–	–	–	–	–	–
WPmMIX-T	–	•	•	•	•	•	•	•	•	•	•	•	•	•	•	–	–	–	–	–
WPTOUCH	–	–	•	•	–	•	•	•	–	•	•	•	(1)	•	•	–	–	–	–	–
WP-PSU	–	–	(3)	(3)	(3) (4)	(3) (4)	(3)	(3)	–	(3)	(3)	(3)	(3)	(3)	(3)	–	–	–	–	–
REVO-IR	–	–	(3)	(3)	(3)	(3)	(3)	(3)	–	(3)	(3)	(3)	(3)	(3)	(3)	–	–	–	–	–
MPAGE1	–	•	•	•	•	•	•	•	–	–	–	–	–	–	–	–	–	–	–	–
MPAGE4	–	–	•	•	•	•	•	–	–	–	–	–	–	–	–	–	–	–	–	–
MPAGE16	–	–	–	–	–	•	–	–	–	–	–	–	–	–	–	–	–	–	–	–
TR2-70	–	–	–	–	–	–	°	–	–	–	–	–	–	–	–	–	–	–	–	–
DLA series	–	–	–	–	–	–	–	–	–	–	°	°	°	°	–	–	–	–	–	–
2UHRMKIT	–	–	–	–	–	–	°	°	–	–	–	–	–	–	–	–	–	–	–	–
SR8	–	–	–	–	–	–	–	–	–	–	–	–	–	–	–	°	–	–	–	–
SR12	–	–	–	–	–	–	–	–	–	–	–	–	–	–	–	°	°	°	–	–
SR100	–	–	–	–	–	–	–	–	–	–	–	–	–	–	–	–	°	–	–	–
SRDABK/WH	–	–	–	–	–	–	–	–	–	–	–	–	–	–	–	–	°	–	–	–
WH200	–	–	–	–	–	–	–	–	–	–	–	–	–	–	–	°	–	–	–	°
QRA	–	–	–	–	–	–	–	–	–	–	–	–	–	–	–	°	–	–	–	°
ADP	–	–	–	–	–	–	–	–	–	–	–	–	–	–	–	–	–	–	°	–
POLE01	–	–	–	–	–	–	–	–	–	–	–	–	–	–	–	°	°	°	–	–

- • Full Compatible
- ° Compatible with some models (check particular model)
- \- Not compatible

(1) When including ALMAcard module
(2) When including DLA module
(3) When including WPTOUCH or WPmMIX-T
(4) When including MPAGE16

PLUG & PLAY AUDIO SETS

ELECTRONICS:

AUDEO SB10P21 (2.1 active subwoofer unit including an integrated stereo satellite amplifier)

CONTROL:

WPmVOL wall panel

LOUDSPEAKERS OPTIONS:

OPTION A

4 to 8 **AUDEO106** units

OPTION B

4 to 8 **AUDEO103** units

OPTION C

4 to 8 **AMBIT106** units

OPTION D

4 to 8 **AMBIT103** units

ELECTRONICS:

NXA4-80 or **NXA6-80** digital audio manager

CONTROL:

WPmSCREEN digital control wall panel

SUBWOOFER LOUDSPEAKER:

AUDEO SB110
(passive 10" subwoofer unit)

LOUDSPEAKERS OPTIONS:

OPTION A

4 to 12 **AUDEO106** units

OPTION B

4 to 12 **AUDEO103** units

OPTION C

4 to 12 **AMBIT106** units

OPTION D

4 to 12 **AMBIT103** units

INSTALLATION REFERENCES

COMMERCIAL

Shoppes at Marina Bay Sands (Singapore)
Brian & Barry (Italy)

Brian & Barry (Italy)

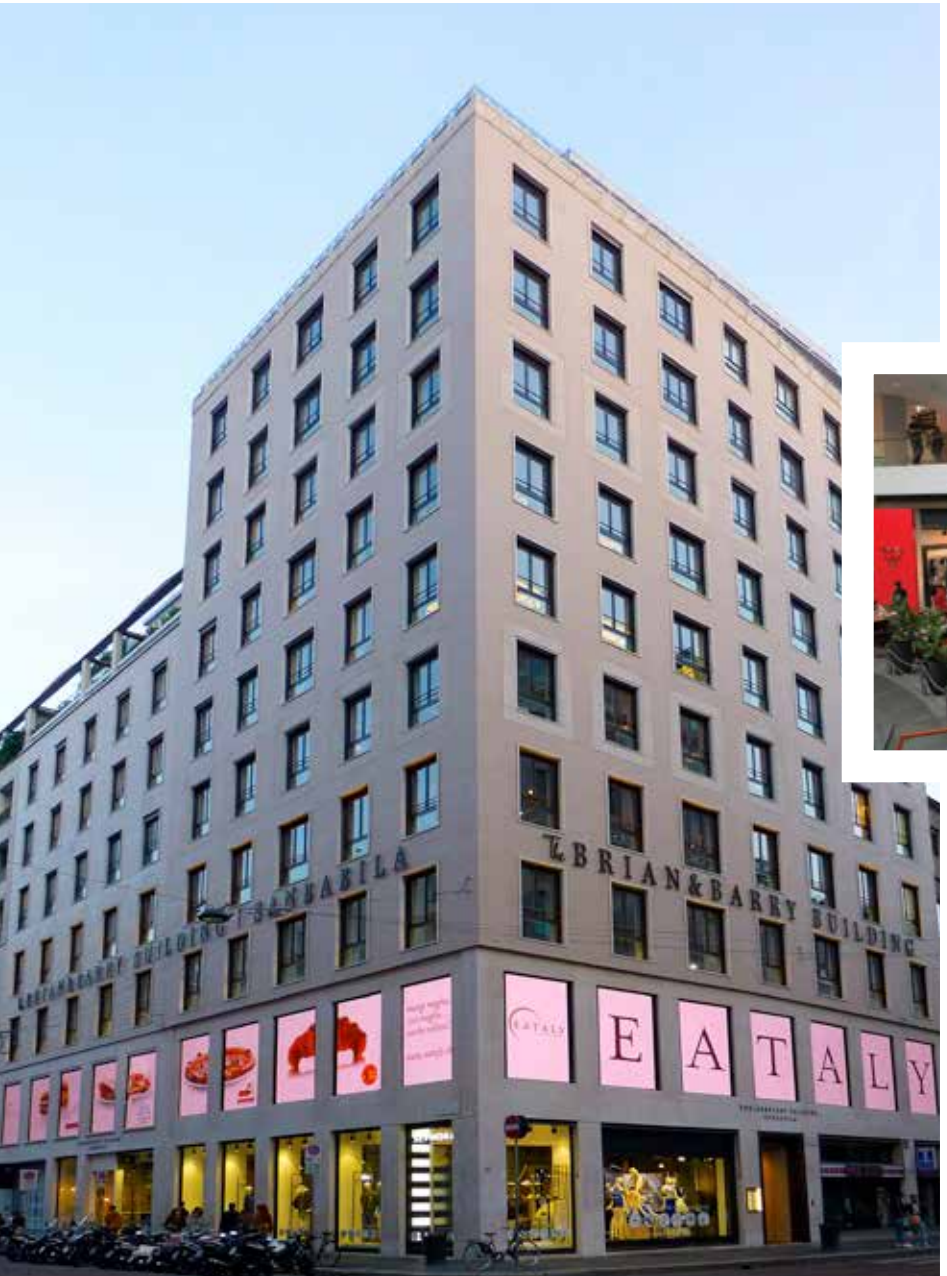

Shoppes at Marina Bay Sands (Singapore)

Il Bacio di Stile (Budapest)
Mango (Barcelona - Spain)
Burberry (Guangzhou Airport - China)

Il Bacio di Stile (Budapest - Hungary)

Mango (Barcelona - Spain)

Burberry (Guangzhou Airport - China)

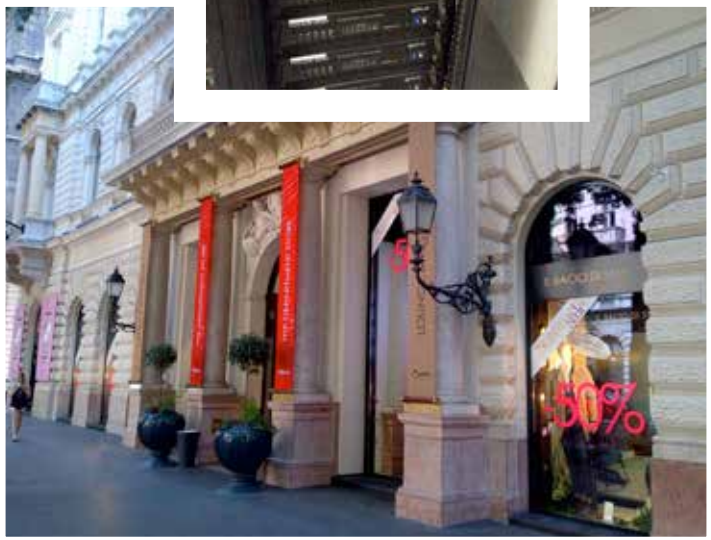

INSTALLATION REFERENCES

HOSPITALITY

Green Park Pendik Hotel (Istanbul - Turkey)
Cevahir Hotel (Istanbul - Turkey)
Hotel Berberys (Poland)

Hotel Berberys (Poland)

Green Park Pendik Hotel (Istanbul - Turkey)

Cevahir Hotel (Istanbul - Turkey)

Le Fouquet (Paris - France)

Fullerton Bay Hotel (Singapore)

INSTALLATION REFERENCES

EDUCATION

Surrey University (UK)
Marie Curie University (Lublin - Poland)
Universitá di Roma (Italy)
Université Paris 13 (France)

Universitá di Roma – Italy

Marie Curie University (Lublin - Poland)

Surrey University (UK)

Université Paris 13 – France

Sas Innovation Center (Poland)
Electrolux (Hungary)
Ministery of Agriculture (Poland)
Telecom Malaysia
Giugiaro showroom (Italy)
Kotra Pharma (Malaysia)
Nokia Care (Singapore)

Sas Innovation Center (Poland)

Electrolux (Hungary)

Ministery of Agriculture (Poland)

Kotra Pharma (Malaysia)

Giugiaro showroom (Italy)

Telecom Malaysia

Nokia Care (Singapore)

SPORTS & WELLNESS

INSTALLATION REFERENCES

Ski World Cup (Val di Fiemme - Italy)
Chemkostav Arena Michalovce (Slovakia)
Nurburgring Circuit Vip Loung (Germany)
Crown Arena Kosice (Slovakia)

Ski World Cup (Val di Fiemme - Italy)

Nurburgring Circuit Vip Loung (Germany)

Chemkostav Arena Michalovce (Slovakia)

Crown Arena Kosice (Slovakia)

Casino Joa Montrond (France)
Teatro Livorno (Italy)
Muzeum Historii Zydow Polskich (Poland)
Maybach Museum (Germany)
Club House The Reach (Hong Kong (China)
Casino Joa Uriage (France)

Casino Joa Montrond (France)

Teatro Livorno (Italy)

Muzeum Historii Zydow Polskich (Poland)

Club House The Reach (Hong Kong (China)

Casino Joa Uriage (France)

Maybach Museum (Germany)

MIM088

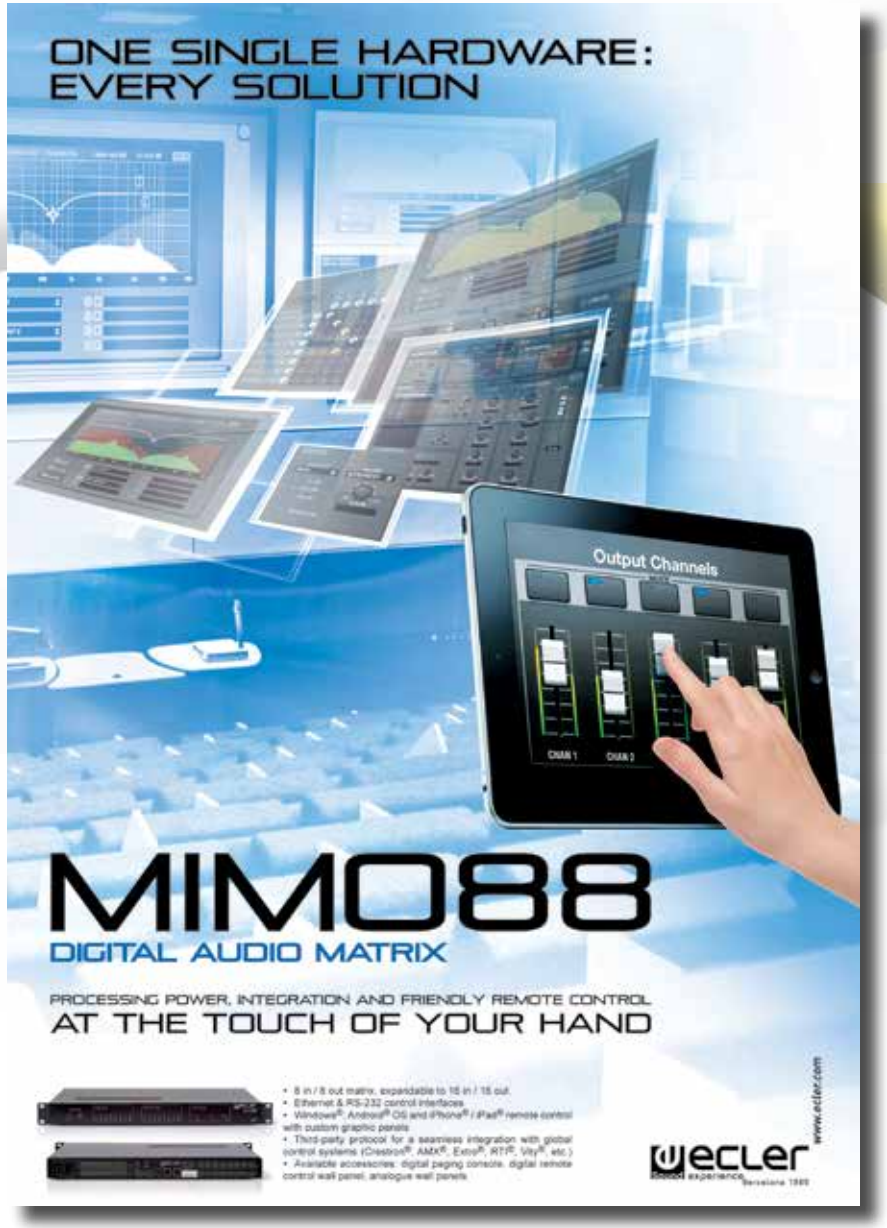

NXA SERIES

WPmSCREEN

CA SERIES

HZA-F SERIES

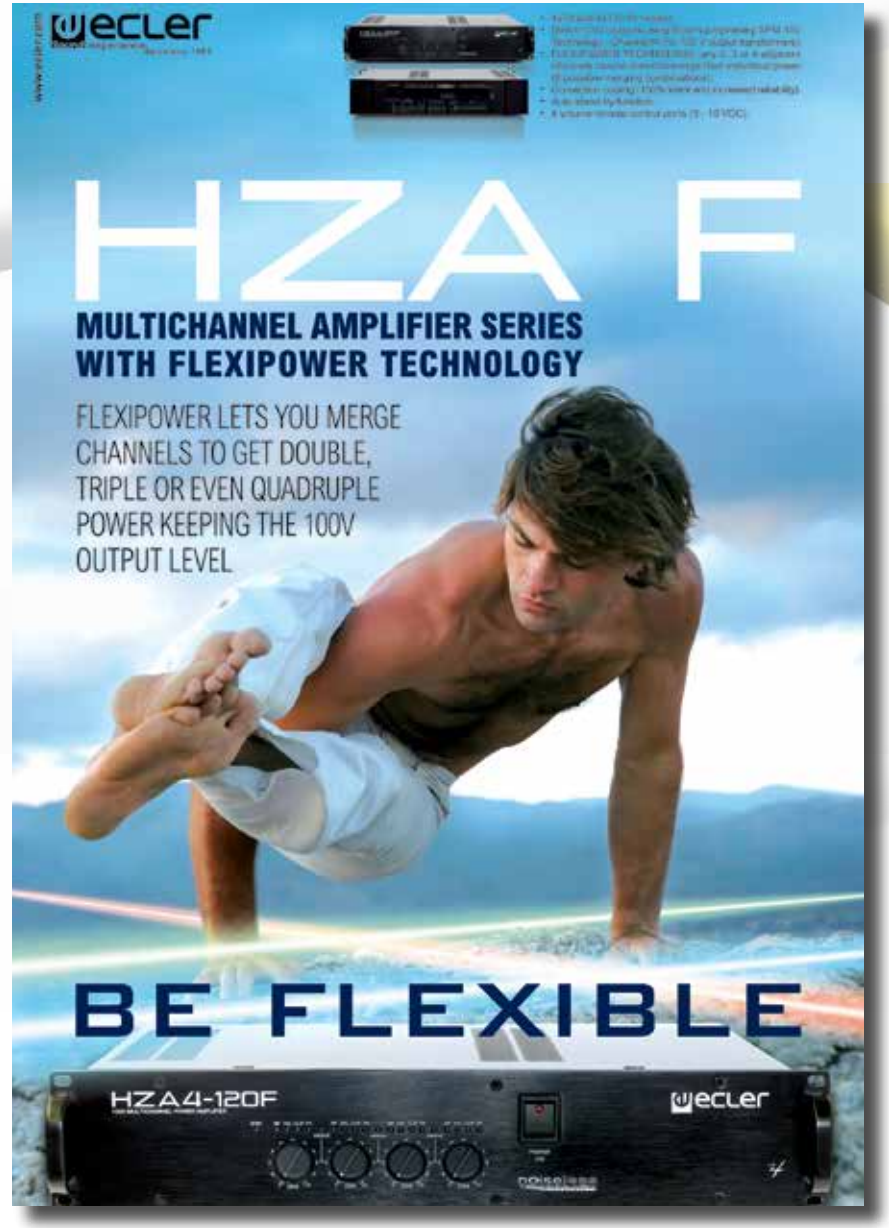

ICPLUS SERIES

AUDEO SERIES

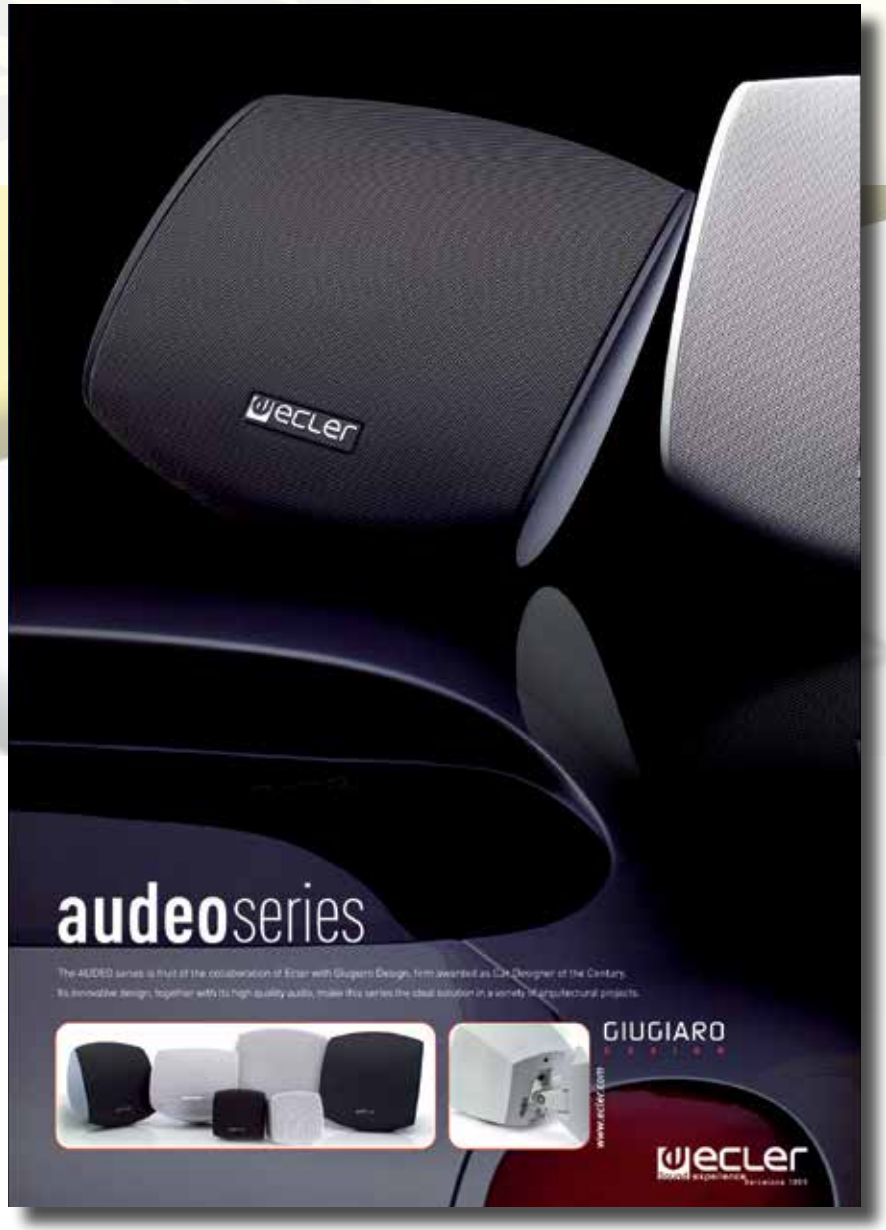

GREEN FACTS

ecler
Sound experience Barcelona 1965

INSTALLER'S GUIDE 2015

All product characteristics are subject to variation due to production tolerances.
ECLER - NEEC AUDIO BARCELONA S.L reserves the right to make changes or improvements in the design or manufacturing that may affect these product specifications.

Motors, 166-168 08038 Barcelona - Spain
Domestic sales / Ventas España **(+34) 932 238 400** Export sales / Ventas Export (+34) 932 238 401
General calls (+34) 932238403 information@ecler.es WWW.ECLER.COM

ENGLISH

@eclerofficial

WORLDWIDE DISTRIBUTION WWW.ECLER.COM